Heavy Metal:

Under the Hood: Operations and Maintenance

Worth the Upkeep?
OR
Boat anchor to efficiency

Mike Reed

Sain Engineering Associates, Inc.

2820 Columbiana Rd. Suite 210
Birmingham, AL 35216

- Fort Polk Future Project
  - Existing Central Energy Plants
  - Proposed Virtual CEP
  - Alternatives Considered
- NASA Marshall Space Flight Center
  - Existing Low dt Syndrome
  - Zero cost change
  - Results

Campus Barracks

CEP 1172

CEP 1628

CEP 1941

CEP 2271

Existing Hydraulics

Constant Flow Design

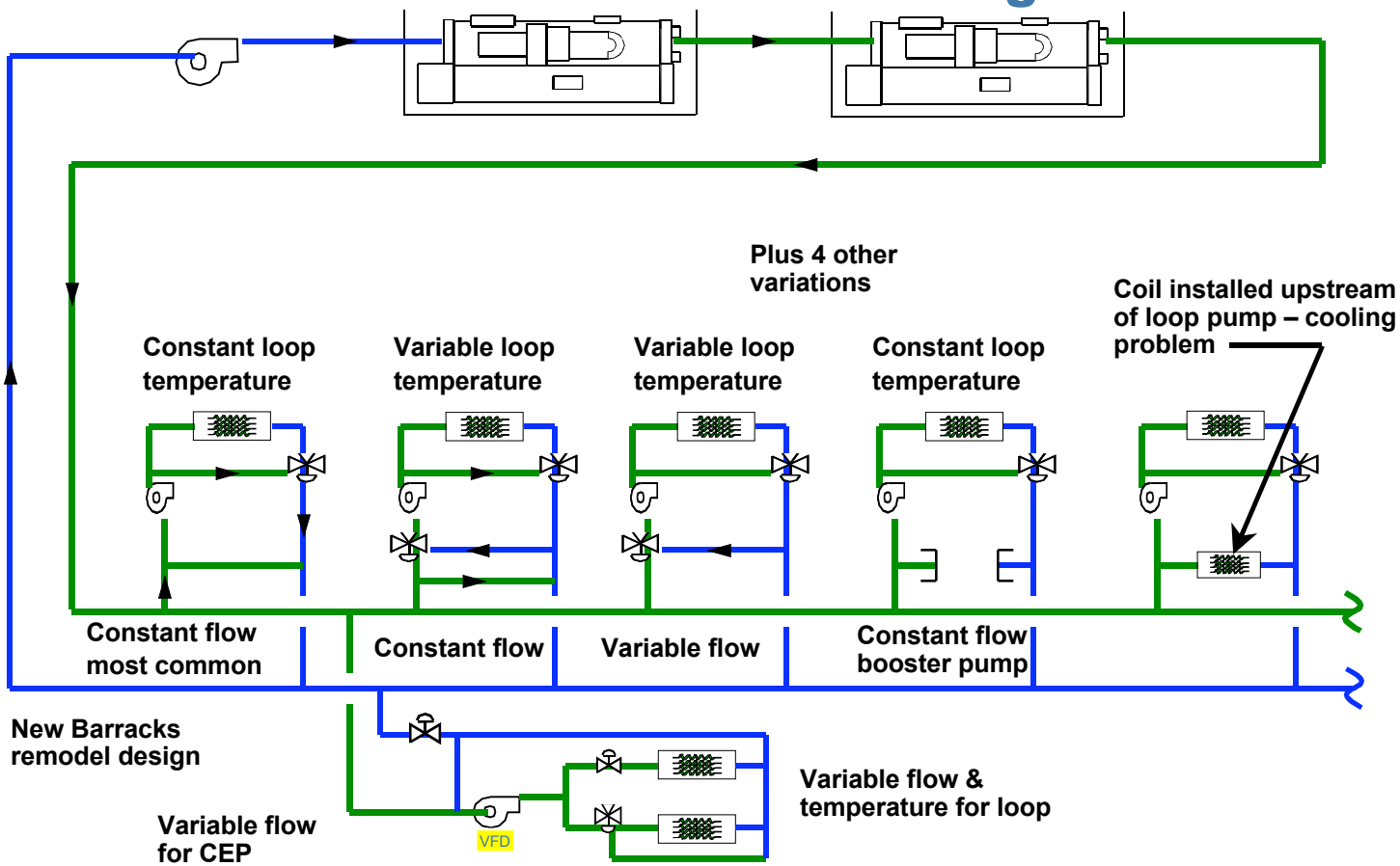

Proposed Virtual CEP

Key Points of Proposed new Virtual CEP

1) Convert all CHW distribution to Variable Flow
   * Change 3-way to 2-way valves
   * Change CEP connections to “A” or “B” design
2) Create Primary/Secondary hydraulic system
3) Add VFDs with controls to Secondary pumps
4) Connect all CEPs for Virtual system design
5) EMCS control of:
   * Chillers
   * Pumps (VFDs)
   * Towers
   * Virtual CEP system
   * Trending & reports
6) ECMs
   * Water side economizer
   * Chilled water reset
   * Variable volume CW
   * Optimum chiller control
     * Start/stops
     * Load management

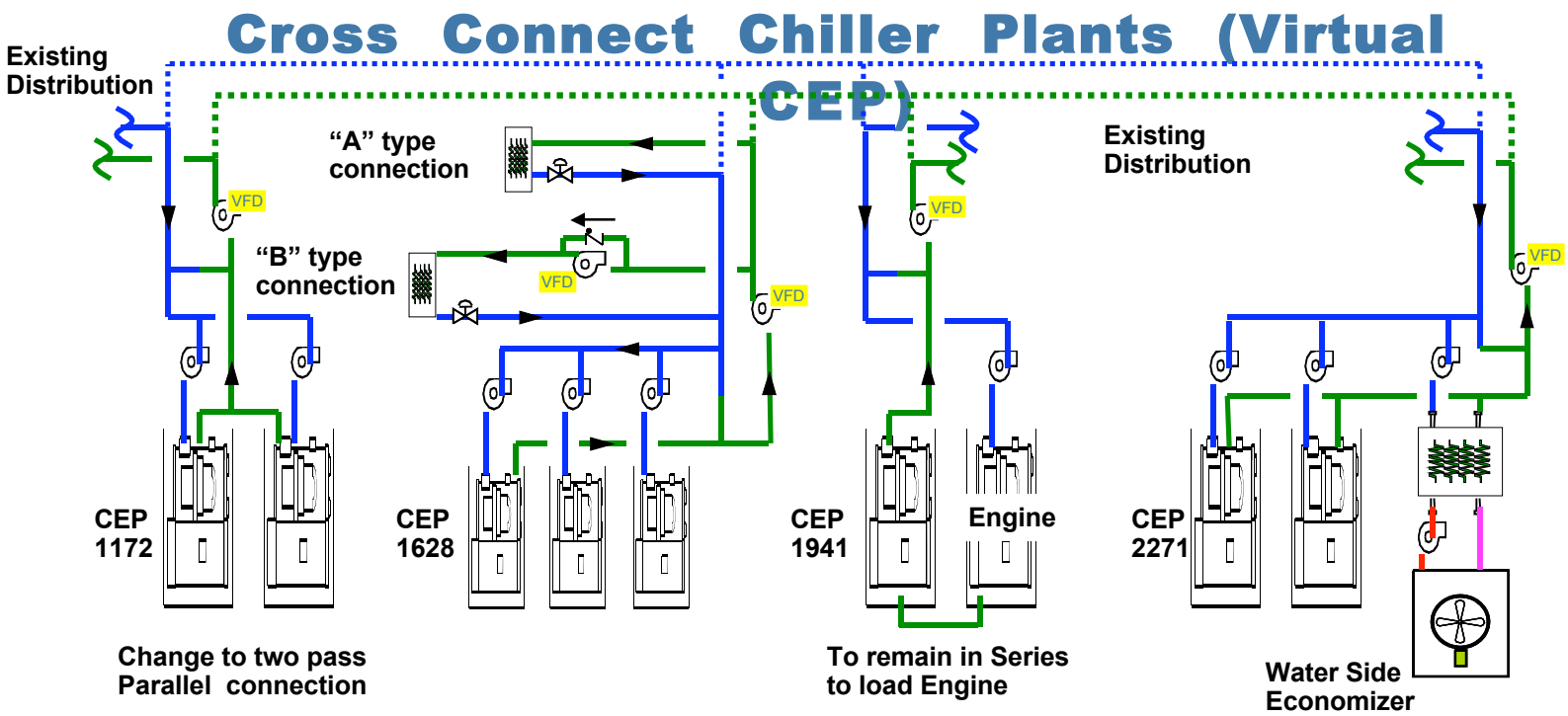

Alternatives Considered

- Virtual CEP
  - Direct burial new distribution system
- 200 Ton air cooled winter chiller
  - One unit / CEP – no cross-connect
- CHP at each CEP
  - New small absorption chillers
- Distributed air cooled chillers

Marshall Space Flight Center Huntsville, AL

MSFC CCWP

MSFC CCWP Schematic

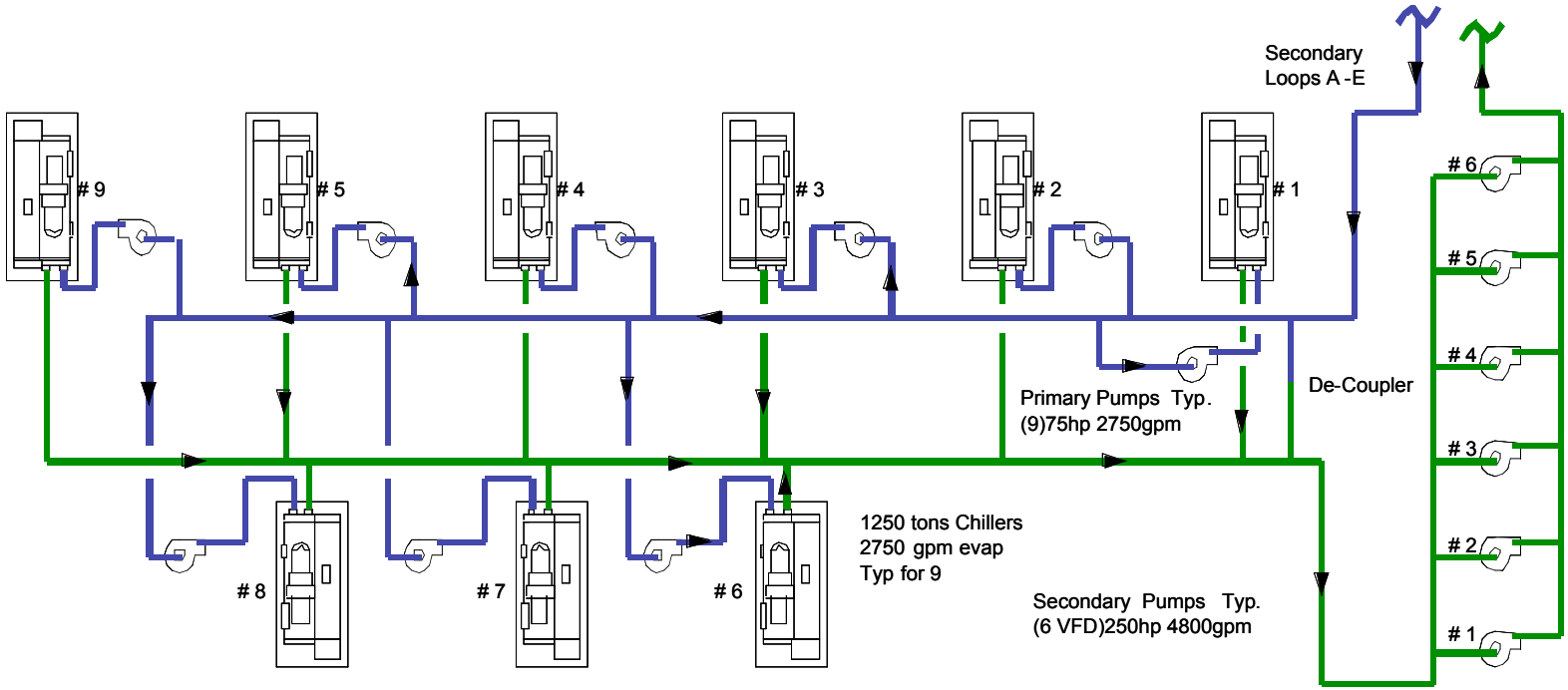

Low dt Syndrome

Low Delta T Syndrome is the condition in which the actual temperature difference on a variable volume distribution (secondary) chilled water system is lower than the original design

Seldom, in the real world does the actual dt equal the design.

MSFC Secondary dt

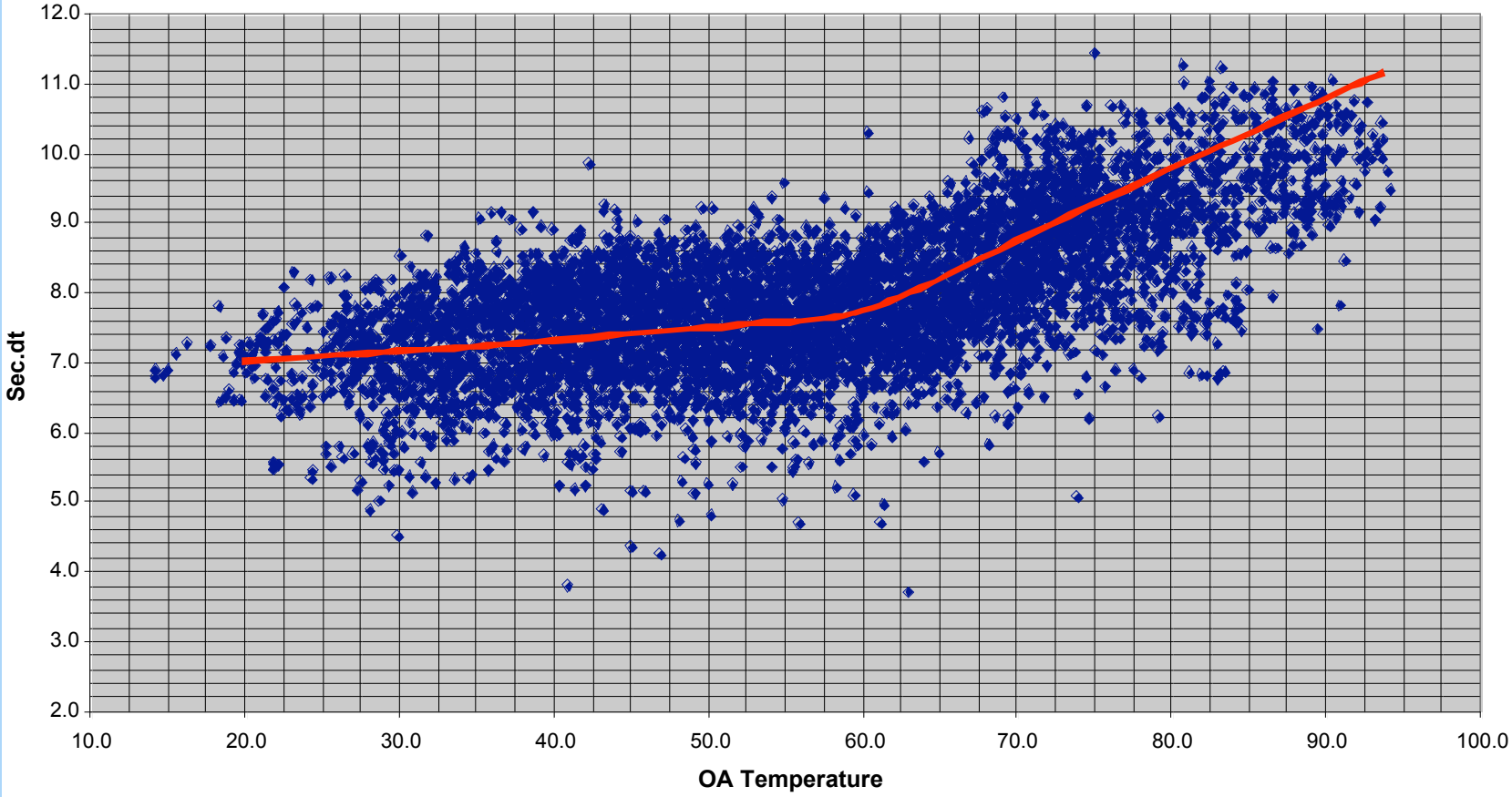

Low dt affect at CCWP

With 7F Low dt Syndrome

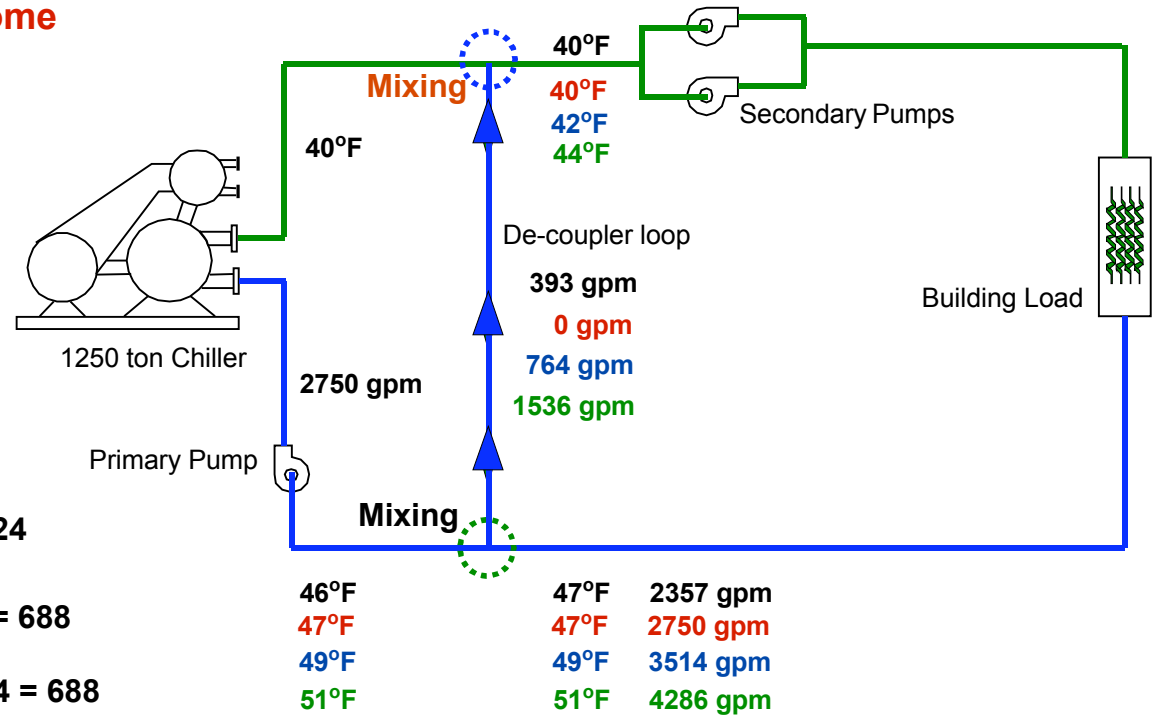

Tons = gpm (delta "T") / 24

Tons Loop= 2357(7) / 24 = 688

Chiller Tons = 2750(6) / 24 = 688

Tons Loop= 2750(7) / 24 = 802

Chiller Tons = 2750(7) / 24 = 802

Tons Loop= 3514(7) / 24 = 1025

Chiller Tons = 2750(9) / 24 = 1025

Tons Loop= 4286(7) / 24 = 1250

Chiller Tons = 2750(11) / 24 = 1250

Common Solution

Example:

With 7F Low dt Syndrome

MSFC Previous Start Sequence - If de-coupler > 3°F above CHW primary for 10 minutes THEN start next chiller

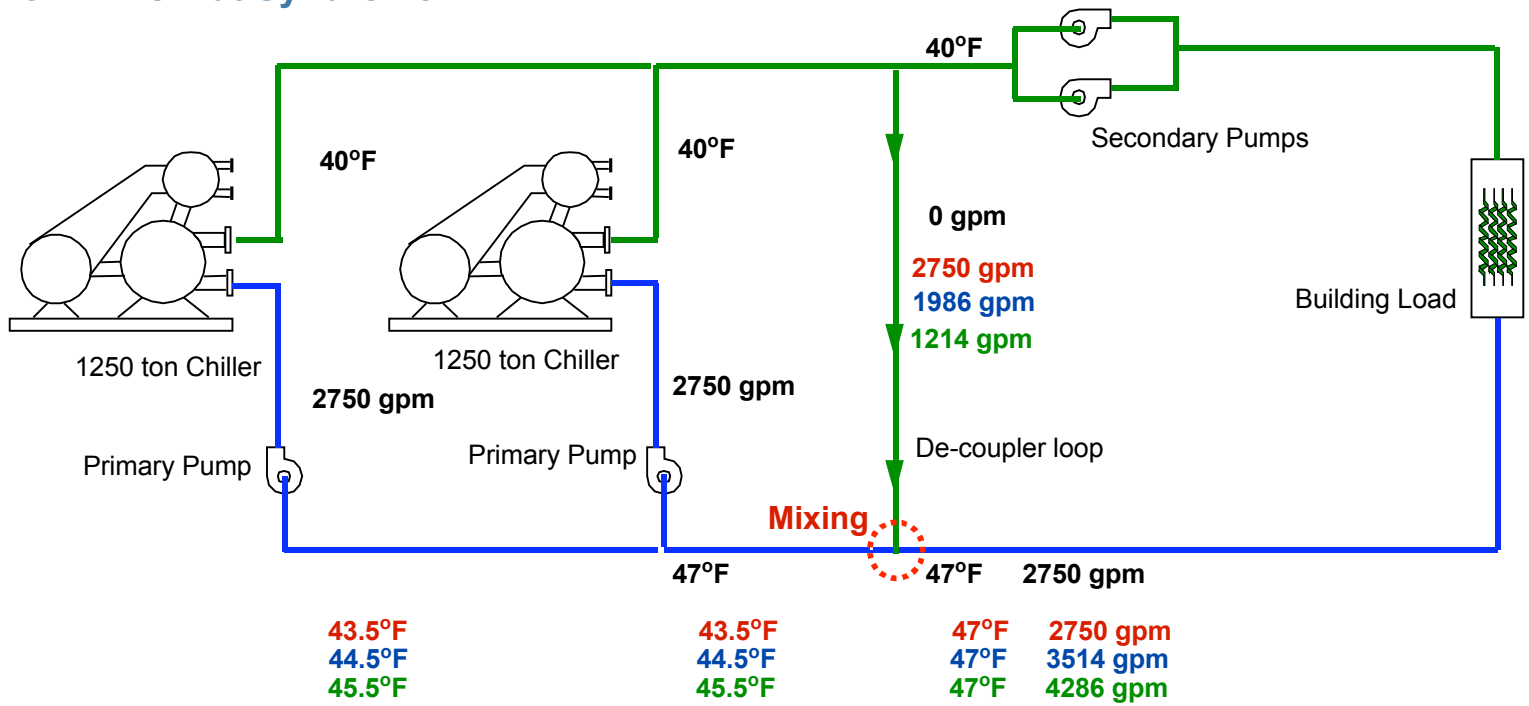

Tons Loop= 2750(7) / 24 = 802

Chiller #1 Tons = 2750(3.5) / 24 = 401

Chiller #2 Tons = 2750(3.5) / 24 = 401

Tons Loop= 3514(7) / 24 = 1025

Chiller #1 Tons = 2750(4.5) / 24 = 513

Chiller #2 Tons = 2750(4.5) / 24 = 513

Tons Loop= 4286(7) / 24 = 1250

Chiller #1 Tons = 2750(5.5) / 24 = 625

Chiller #2 Tons = 2750(5.5) / 24 = 625

Secondary CHWS Reset Schedule

Winter of 2005 MSFC was able to prove the operation of CHWS at 45°F when the OA was less than 50°F

OA°F	CHWS
82.5°F	40°F
52.5°F	44°F

OA	CHWS
87.5	40.0
82.5	40.0
77.5	40.67
72.5	41.33
67.5	42.00
62.5	42.67
57.5	43.33
52.5	44.0
47.5	44.0

Change Control Logic

Example:

With 7F Low dt Syndrome

MSFC New Start Sequence - If % load > 80% & CHWS Sec. >1°F above reset setpoint for 5 min. Then start next chiller

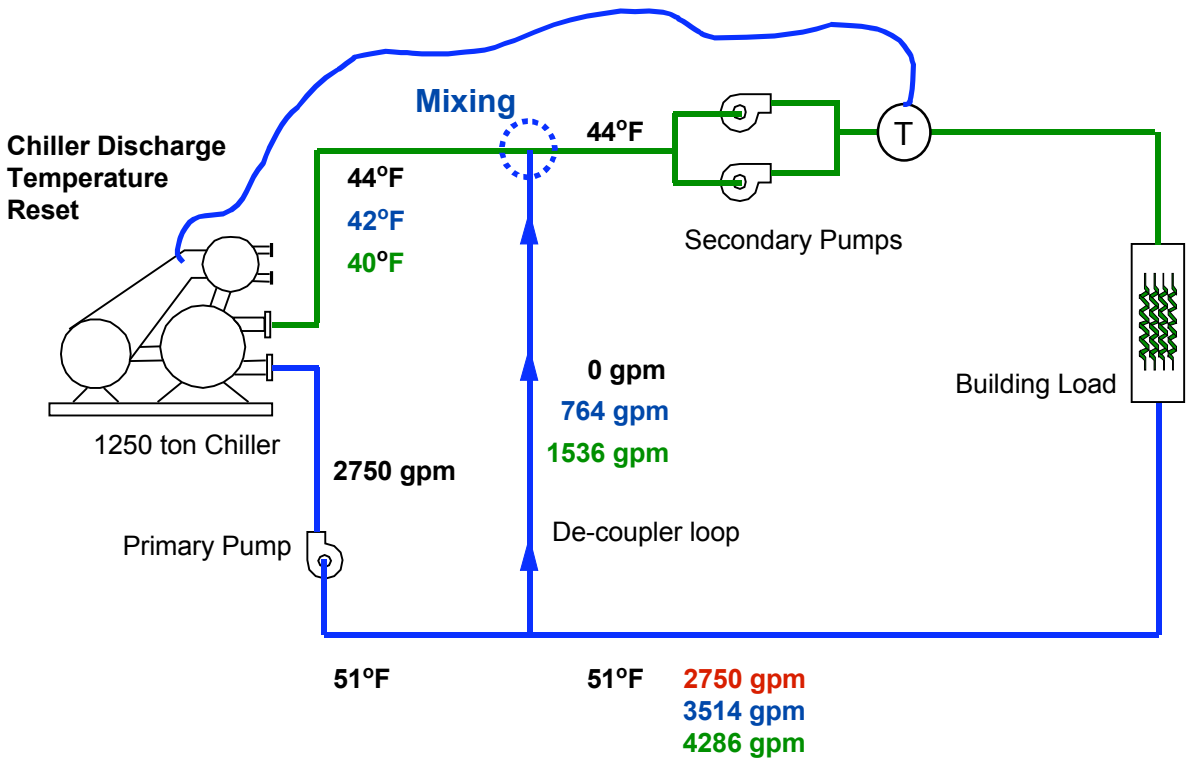

Loop Tons = 2750(7) / 24 = 802 **Loop Tons = 3514(7) / 24 = 1025** **Chiller Tons = 4286(7) / 24 = 1250**

Chiller Tons = 2750(7) / 24 = 802 **Chiller Tons = 2750(9) / 24 = 1025** **Chiller Tons = 2750(11) / 24 = 1250**

Before Change to Operation

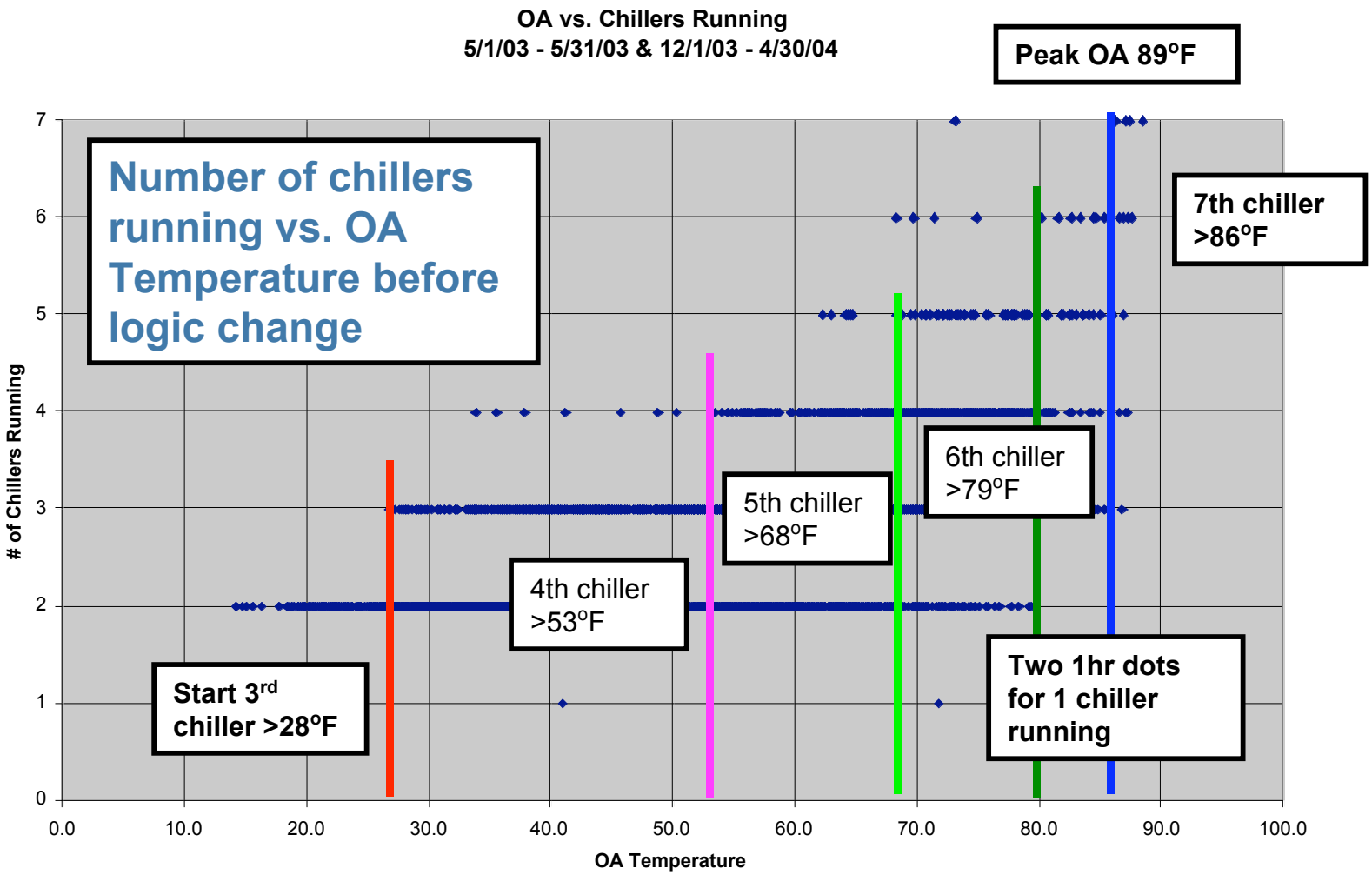

Operation After Logic Change

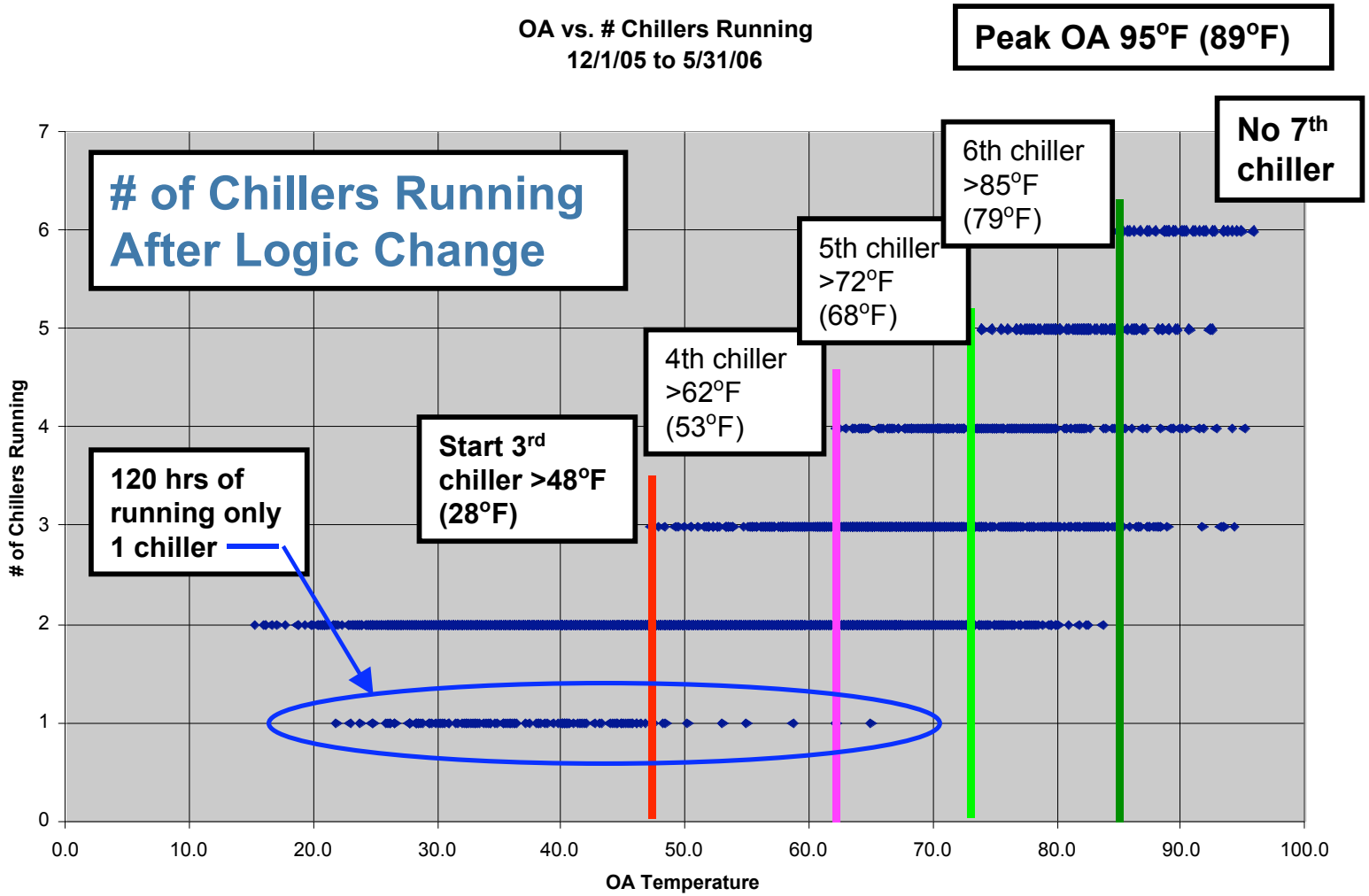

One Day Compare

	Date		OA °F		Chillers Running		Sec.CHWS °F		De-Coupler GPM	
Time	Before	After	Before	After	Before	After	Before	After	Before	After
0:00:00	16-May-03	5/23/2006	67.5	69.2	3	2	40.6	43.2	5627	-2506.8
1:00:00	16-May-03	5/23/2006	66.4	67.8	3	3	40.5	42.2	5395	-3100.2
2:00:00	16-May-03	5/23/2006	65.9	66.6	3	3	40.6	42.9	5081	-3547.0
3:00:00	16-May-03	5/23/2006	65.4	65.1	3	3	40.6	43.2	4377	-3794.3
4:00:00	16-May-03	5/23/2006	65.0	63.5	3	3	40.6	42.9	4155	-3792.9
5:00:00	16-May-03	5/23/2006	64.8	62.4	3	3	40.9	43.1	3384	-4483.5
6:00:00	16-May-03	5/23/2006	64.7	62.7	3	3	40.9	41.9	2628	-5450.7
7:00:00	16-May-03	5/23/2006	66.8	66.9	3	3	41.8	45.2	2265	-4314.7
8:00:00	16-May-03	5/23/2006	72.1	71.5	4	4	41.1	42.3	5055	-4018.2
9:00:00	16-May-03	5/23/2006	74.3	77.9	4	4	41.1	42.3	4767	-3776.8
10:00:00	16-May-03	5/23/2006	78.5	82.1	4	5	42.4	44.2	3669	316.2
11:00:00	16-May-03	5/23/2006	81.1	82.1	4	5	43.9	42.3	0	344.6
12:00:00	16-May-03	5/23/2006	84.4	81.6	5	5	43.3	42.2	3628	-102.1
13:00:00	16-May-03	5/23/2006	84.5	83.0	6	5	41.6	42.2	6287	-434.0
14:00:00	16-May-03	5/23/2006	74.8	84.5	6	5	40.3	42.1	7145	-1423.2
15:00:00	16-May-03	5/23/2006	71.4	85.3	6	6	40.5	40.9	8553	-1157.7
16:00:00	16-May-03	5/23/2006	69.6	86.0	6	4	40.5	41.5	9378	-6160.5
17:00:00	16-May-03	5/23/2006	68.2	84.8	6	4	40.4	42.7	10483	-6425.4
18:00:00	16-May-03	5/23/2006	69.4	84.4	5	4	40.8	40.7	10524	-1274.1
19:00:00	16-May-03	5/23/2006	71.6	82.9	5	3	40.8	40.5	11264	-1326.2
20:00:00	16-May-03	5/23/2006	68.6	75.8	5	3	40.8	41.5	11209	-241.4
21:00:00	16-May-03	5/23/2006	68.2	73.1	4	2	40.5	40.7	8898	-2683.1
22:00:00	16-May-03	5/23/2006	67.7	71.6	4	2	40.5	40.7	8898	-2180.3
23:00:00	16-May-03	5/23/2006	67.9	69.2	4	2	40.5	40.5	8910	-2167.6

Results at the Meter

Cooling Tons	OCT	NOV	DEC	JAN	FEB
LOOP "A"	574,583	401,667	281,833	306,167	258,500
LOOP "B"	23,083	13,567	5,033	13,700	9,792
LOOP "C"	506,642	407,417	355,500	382,750	351,900
LOOP "D"	758,583	552,333	416,750	483,917	408,417
LOOP "E"	323,917	226,500	151,417	177,667	144,167
Totals	2,186,808	1,601,483	1,210,533	1,364,200	1,172,775

Plant					
BTU's IN	OCT	NOV	DEC	JAN	FEB
KWH	1,878,600	1,392,600	991,100	1,132,300	984,900

kW/Ton	0.8591	0.8696	0.8187	0.8300	0.8398

Eliminate Boat Anchors & Move on to Efficiency

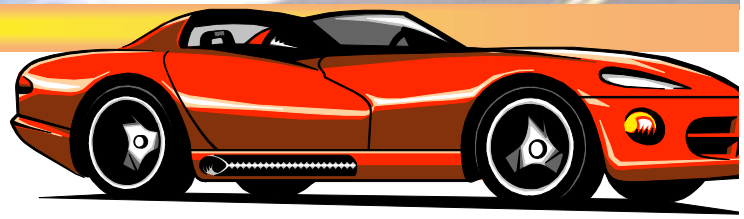

QUESTIONS?