Geothermal Heat Pump (GHP) Retrofits in Federal Facilities

John Shonder
Oak Ridge National Laboratory

GovEnergy
www.govenergy.gov

GHPs offer a number of benefits for federal facilities

- Reduced energy cost
- Reduced energy demand
- Reduced maintenance costs
- Increased space
- Simple if done correctly
- Low life-cycle cost
- Reliable, modular
- Improved comfort

- Recognition
  - Energy Star
  - LEED
- Progress on EO goals
  - Site energy reduction
  - Emissions reductions
  - Renewables

Retrofits vs. new construction

- Federal government owns 3 billion square feet
- Over next ten years, 20% of federal building stock expected to be new construction
- Meeting conservation goals will require retrofitting of existing buildings

Retrofit projects must be cost-effective

- Like most advanced conservation measures, GHPs tend to have higher first costs than many conventional alternatives
- This, combined with low utility rates at some government facilities, means GHP retrofits may have longer paybacks than some conventional alternatives
- This presentation will examine some methods of improving GHP project economics

Basics of retrofit economics

- Simple payback time is the ratio of installation cost to annual savings
- To shorten payback, reduce installation cost and increase annual savings
- For more complicated projects, life cycle costing techniques must be used

Types of GHP

- Much of this presentation focuses on vertical bore GHP, which is most common for commercial and residential systems
  - But there are several alternatives, which we will discuss

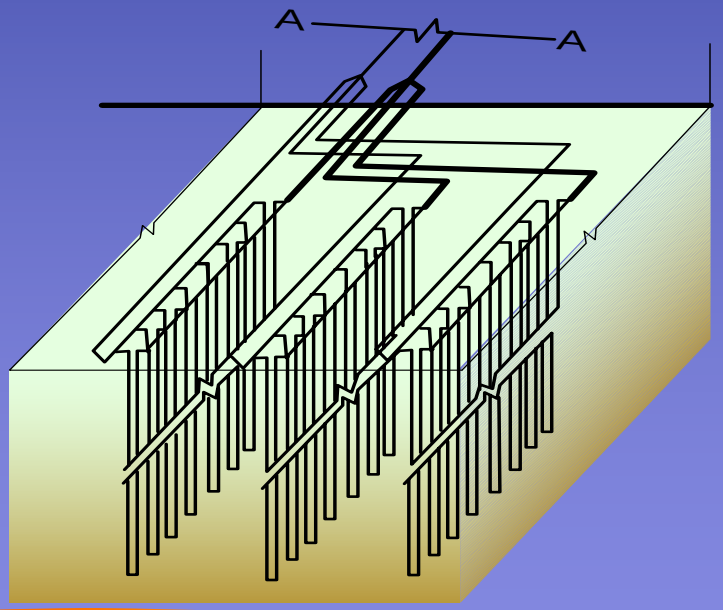

Multiple heat pumps on common loop is the typical commercial arrangement

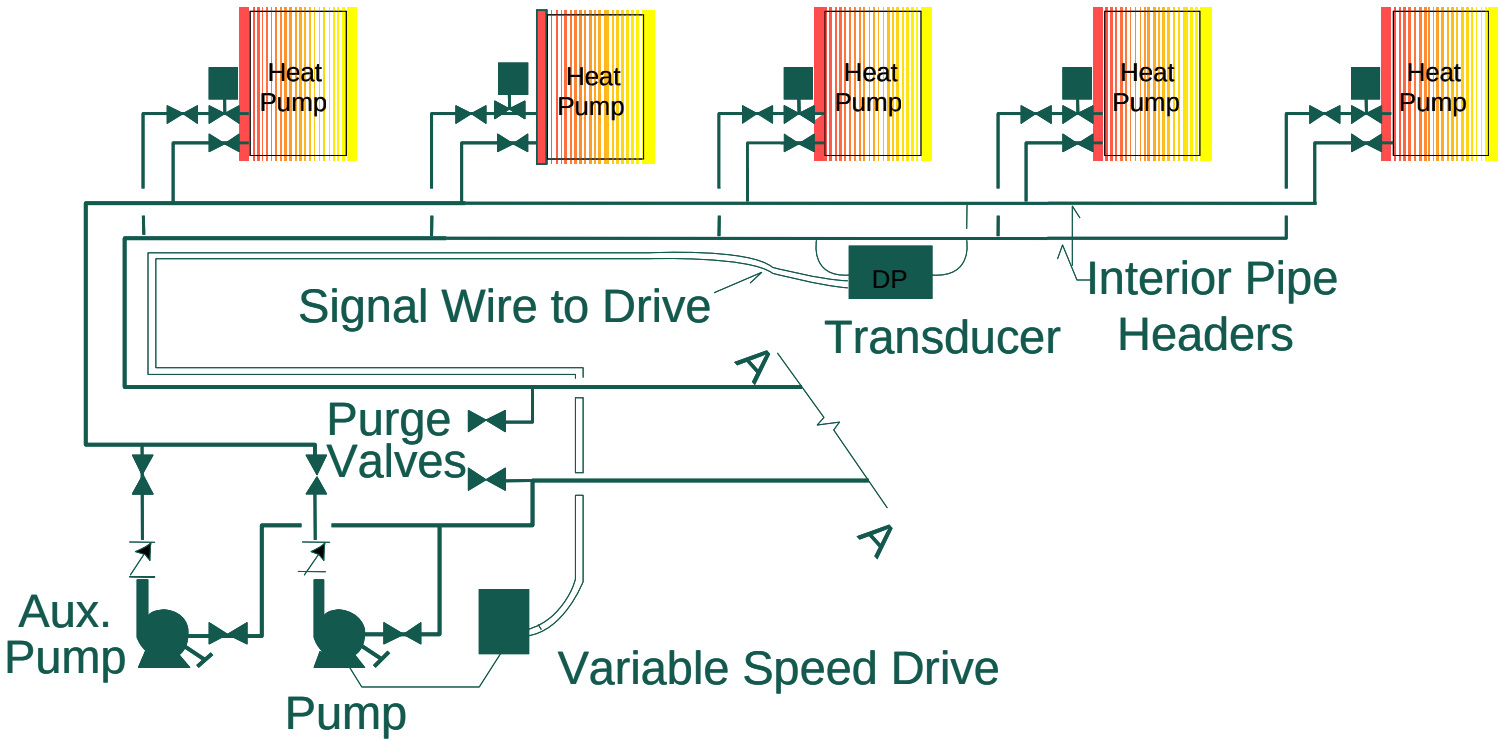

General considerations

- Cost effectiveness of a GHP retrofit will depend on
  1. Annual heating/cooling loads
  2. Age and condition of existing equipment
  3. Energy use and energy costs
  4. Availability of geothermal resource

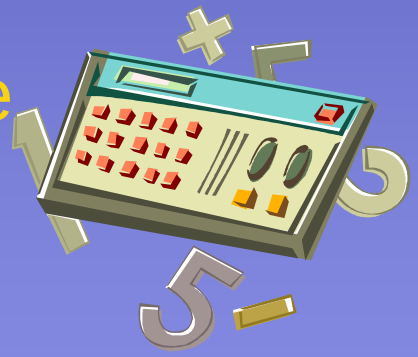

1. Annual heating/cooling loads

- Retrofits will be more cost-effective the more heating and cooling is required (pre-retrofit)
- Load balance is a concern as well -- highly imbalanced loads require additional bores, which increase system cost
- Savings can be increased -- and installation costs reduced -- by reducing these loads

Make GHPs the center of a comprehensive effort

- Envelope improvements
  - Insulation
  - Weatherization
  - Windows
- Lighting
- Controls
  - Night setback
  - Occupancy sensors
- Reduced load = reduced cost to install GHPs and increased savings

Annual heat rejection/ absorption to ground

- Most commercial buildings are dominated by cooling, even in northern US
- With GHPs, these buildings reject more heat to the ground than they absorb over the year, which increases required loop length and cost
- Using GHPs to heat water (or for other process loads) is one way to reduce the imbalance
- Hybrids are another option

Advantages of hybrids

- Tower provides extra heat rejection capacity
- Borefield can be sized to meet heating load (which is generally small)
- Installation costs may be reduced by 15-20%, depending on application

2. Age and condition of existing equipment

- Higher operating and maintenance costs of older equipment improve feasibility of retrofits
- Little to be gained by replacing new, efficient equipment
- Planned renovation costs for existing equipment improve economics
  - Life cycle costing methods must be used

3. Energy use and energy costs

- Savings = $(\text{cost} \times E)_{\text{before}} - (\text{cost} \times E)_{\text{after}}$
- Higher "before" energy costs improve economics of GHP retrofit projects
- Lower energy use and cost after retrofit also improves economics
- Pumping energy is an area of concern for GHPs

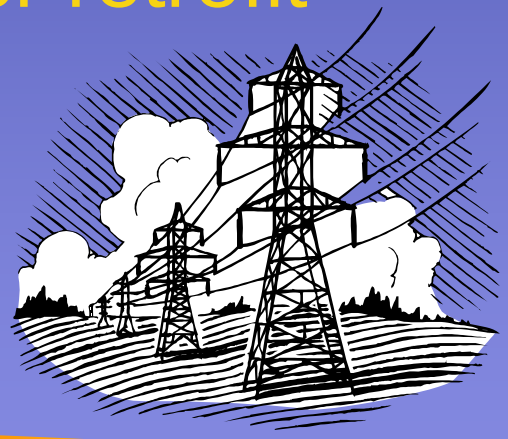

Pumping energy

- Poor design can result in pumping energy being as high as 50% of total GHP energy use
- Variable speed pumping is one option to reduce this
- Multiple unitary loops may be possible in low-rise buildings
  - Avoids cost of interior piping, exterior headers, valve vaults

4. Availability of geothermal resources

- Up to now, we have assumed vertical bore ground heat exchangers
- Other methods of exchanging heat may be more cost-effective if available
- Site characterization is an important step in GHP project design

Opportunistic heat exchange sources

- Groundwater already pumped to the surface (for example for decontamination)
- Treated effluent water from sanitary district
- Municipal water system

Common loop conditioned by domestic water supply

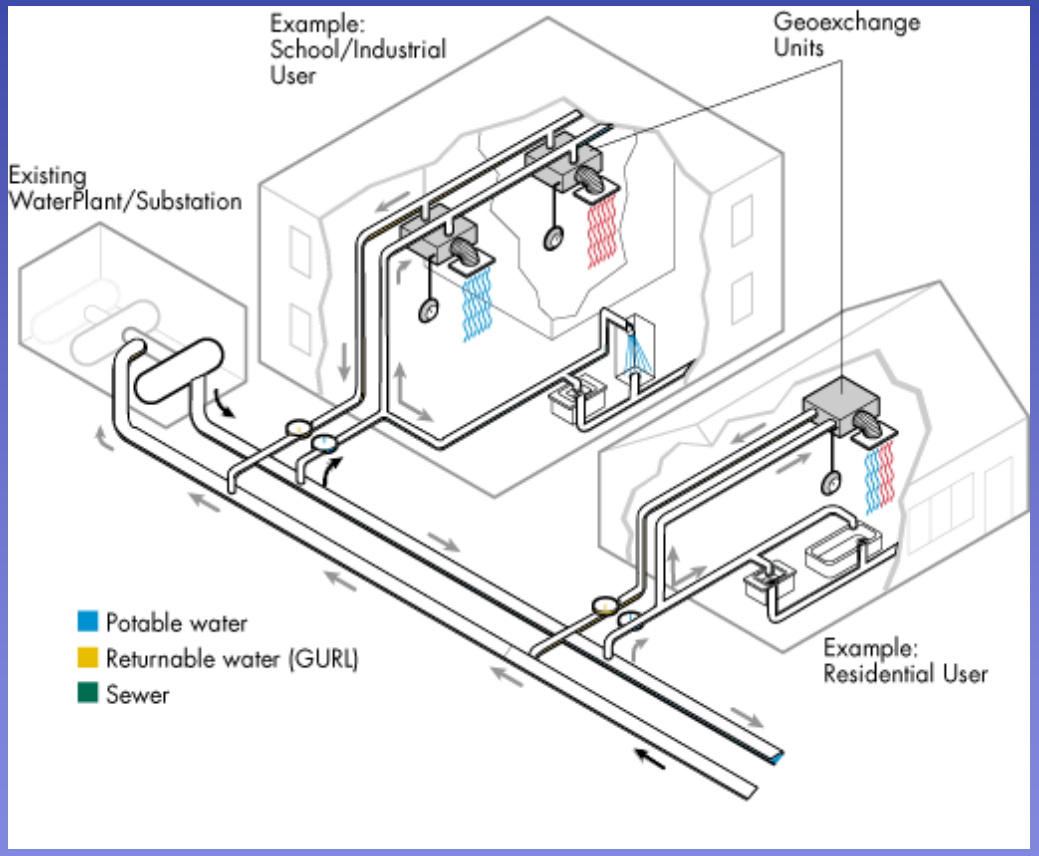

Groundwater systems

- Groundwater pumped to surface, used as heat source/sink for heat pumps
- Generally requires wells with flow of 2-3 gpm/ton
- Groundwater either reinjected into aquifer or disposed of at surface
- Local environmental regulations govern extraction and disposal of water

Common loop conditioned by groundwater (open loop)

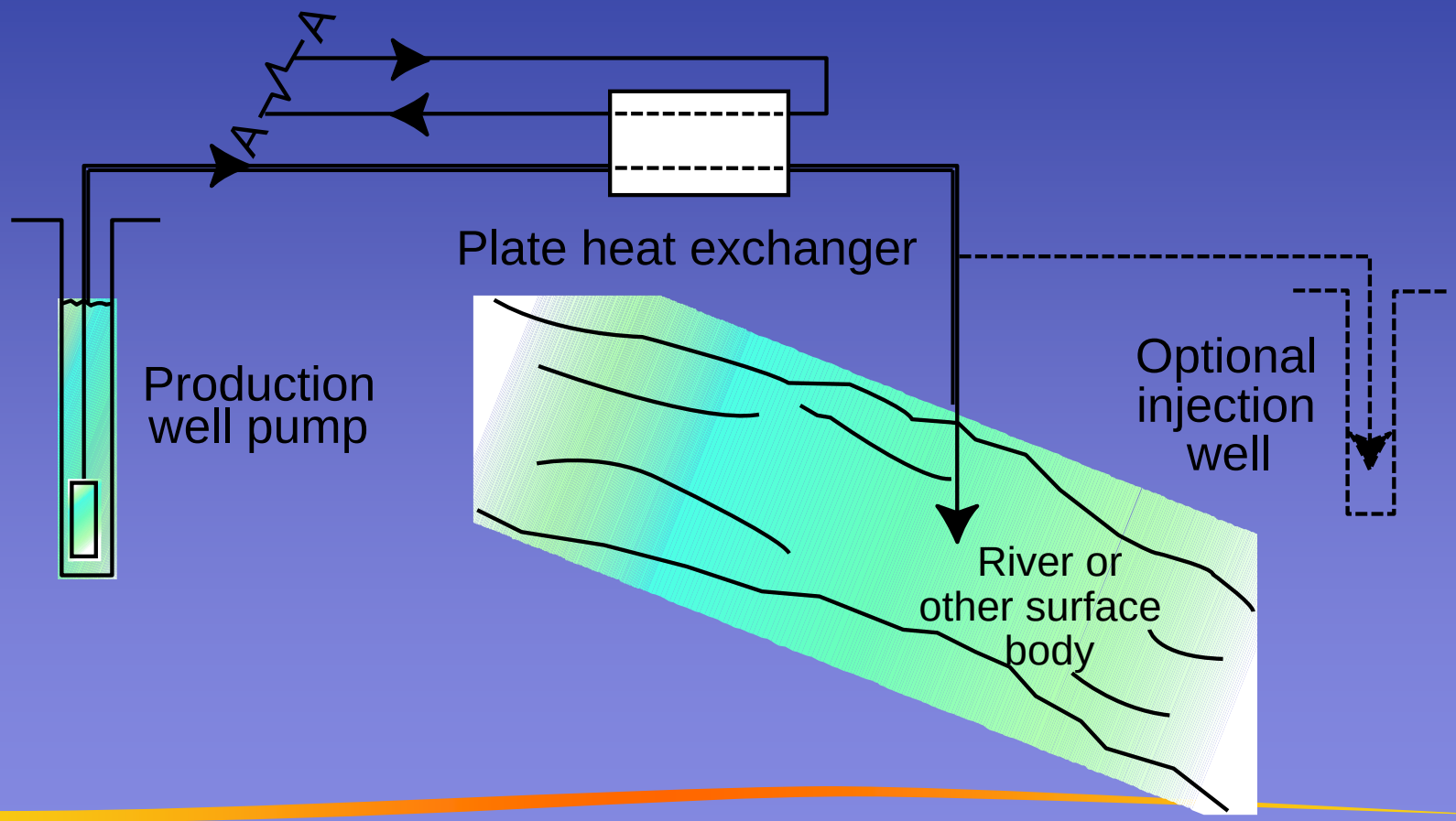

Common loop conditioned by surface water (closed loop)

Typically 15 tons/acre (depth15-20 ft) or as high as 85 tons/acre for well-stratified deep lakes

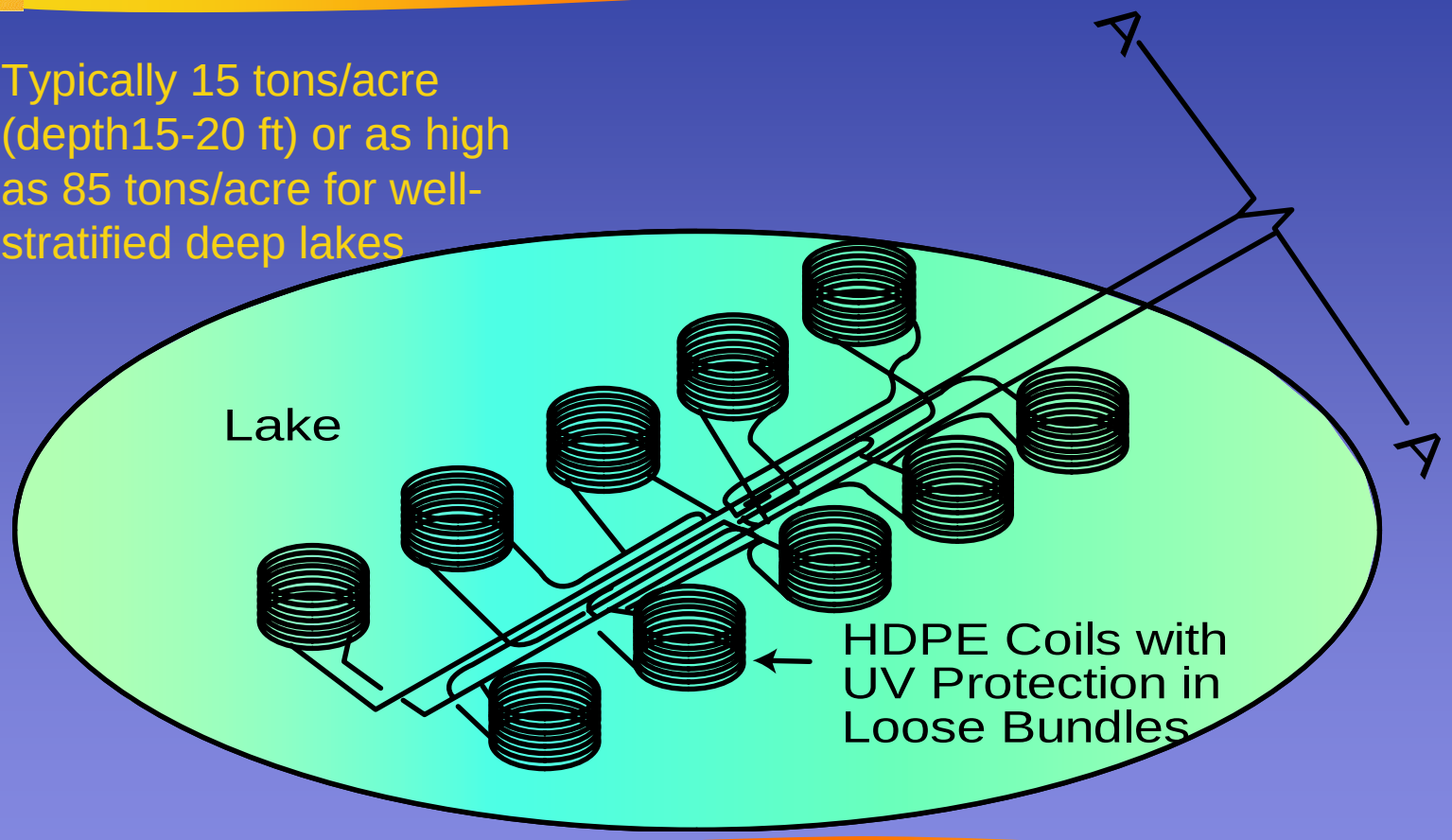

Example: Fond du Lac High School

Source: CDH Energy

Standing column wells

- Hard, competent rock
- High water quality
- Most existing installations in Eastern US

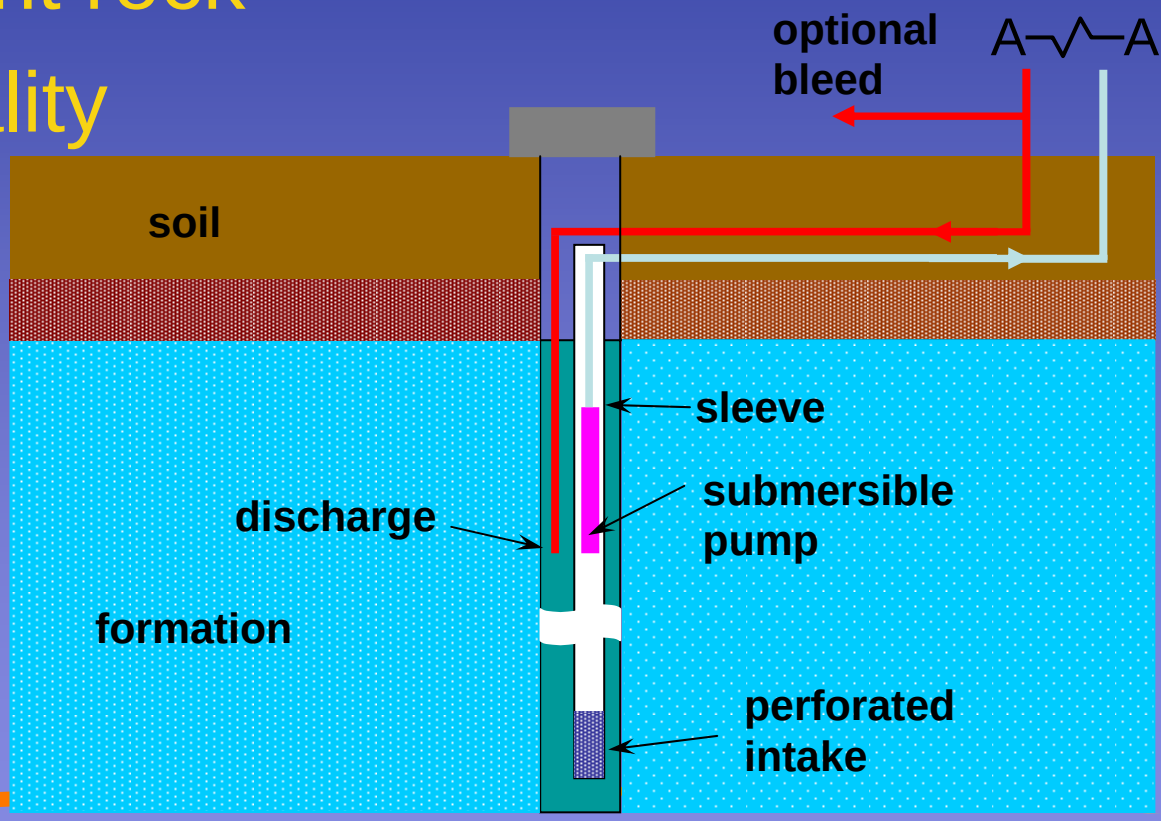

Carlisle Barracks ESPC

- 883 tons of GHP supplied by standing column wells
- Residential and commercial systems
- Eliminated need for boiler plant

Vertical bore systems

- In situ thermal conductivity measurements lead to optimal designs
- Use adequate bore spacing (generally 20 feet on centers)
- Thermally-enhanced grouts reduce heat transfer resistance, shortening required bore length

Conclusions

- GHP retrofits can be economical at most sites, in many applications, with any type of funding
  - ESPC, UESC, and appropriations have all been used to install GHP systems
- Key is system designers who are
  - Experienced with GHP
  - Not afraid to examine alternative GHP system types

Owners (you) are another key to success

- Do your homework
  - ASHRAE courses
  - IGSHPA training
- Ask questions
- Get assistance if needed
  - FEMP Technical Assistance
  - National Laboratories

Some references to start with

- ASHRAE Handbook: HVAC Applications, 2007, Chapter 32.
- *Ground Source Heat Pumps*, Kavanaugh and Rafferty. ASHRAE, 1997.
- http://www.igshpa.okstate.edu/

For More Information

Would you like to know more about this session?

John Shonder
Oak Ridge National Laboratory
P.O. Box 2008, Oak Ridge, TN 37831
shonderja@ornl.gov

Don’t forget to fill out and drop off your session evaluations!