GovEnergy
www.govenergy.gov

GSA

Phoenix, AZ

August 3-6, 2008

Dedicated Outdoor Air Systems and their Application to Army Barrack Buildings

Alexander Zhivov

James Miller

ERDC-CERL, USACE

GovEnergy
www.govenergy.gov

Dedicated Outdoor Air System (DOAS)

- Dedicated Outdoor Air System (DOAS) delivers 100% OA to each individual space in the building. Airflow rates generally are dictated by
  - Indoor air quality needs;
  - Make-up air for bathroom and kitchen exhausts (when needed)
- Complemented by a heating or heating and cooling system taking care of a sensible load

Alexander Zhivov

Traditional DOAS in Europe

Typical controllable ventilation system using operable windows

Controllable hydronic radiant heating system with a thermal valve to change the water flow rate through the radiator

Alexander Zhivov

DOAS with a Mechanical Air Supply + Radiant Heating Systems

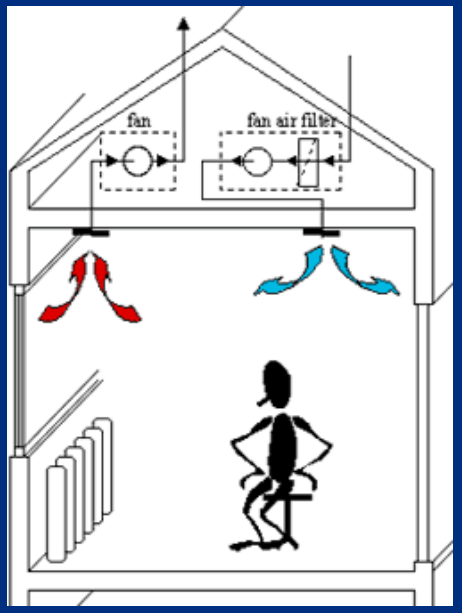

Mechanical Air Exhaust

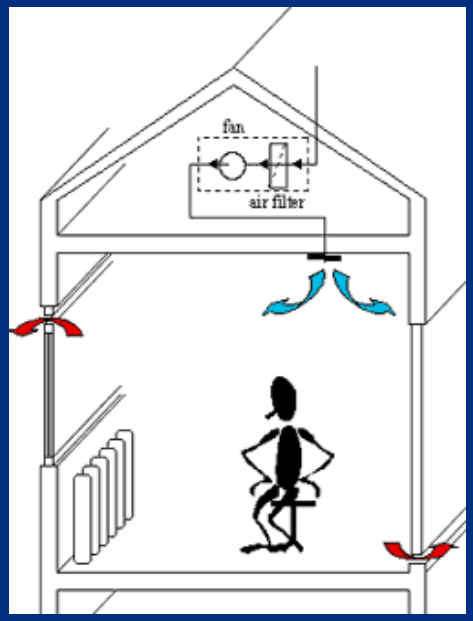

Natural Air Exhaust

www.learn.londonmet.ac.uk/.../mv/index.html

GovEnergy
www.govenergy.gov

Alexander Zhivov

August 3, 2008

Modern European DOAS with suspended radiant heating/cooling panels

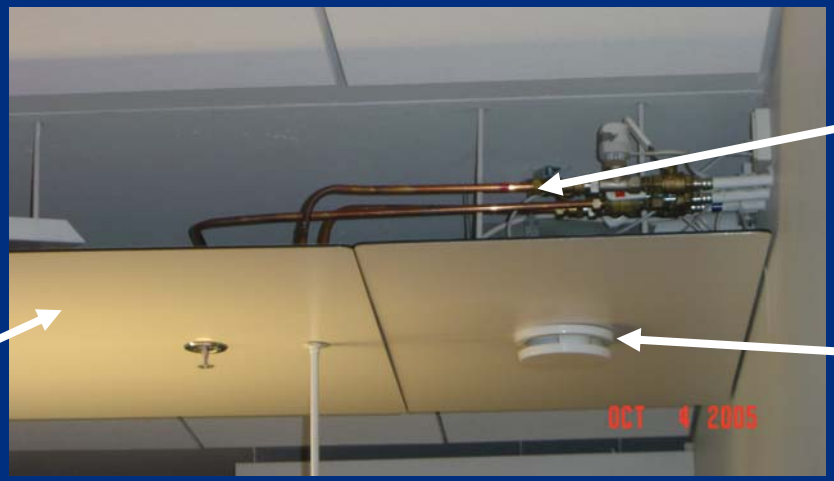

3-pipe system:
hot water supply,
chilled water supply,
return

Radiant panel

Supply air diffuser

Radiant panel
back side

GovEnergy
www.govenergy.gov

Alexander Zhivov

August 3, 2008

How can European DOAS be Applied in the USA???

- The major challenge for the DOAS in the USA compared to Europe is that in most of cases it needs to operate at a higher outdoor air humidity and a higher building latent load.
- Thus the DOAS shall be modified to meet this challenge

Alexander Zhivov

Adaptation of the Dedicated Outdoor Air System to Humid Climates

- Dedicated Outdoor Air System (DOAS) delivers 100% OA to each individual space in the building via its own duct system. Airflow rates generally are dictated by
  - Indoor air quality needs (based on ASHRAE Std. 62.1-2004 or better);
  - Make-up air for bathroom and kitchen exhausts (when needed);
  - Latent load (dehumidified supply air provides humidity control);
  - Building pressurization to prevent infiltration which allows for reduction of heating/cooling and moisture loads.

Alexander Zhivov

DOAS Concept

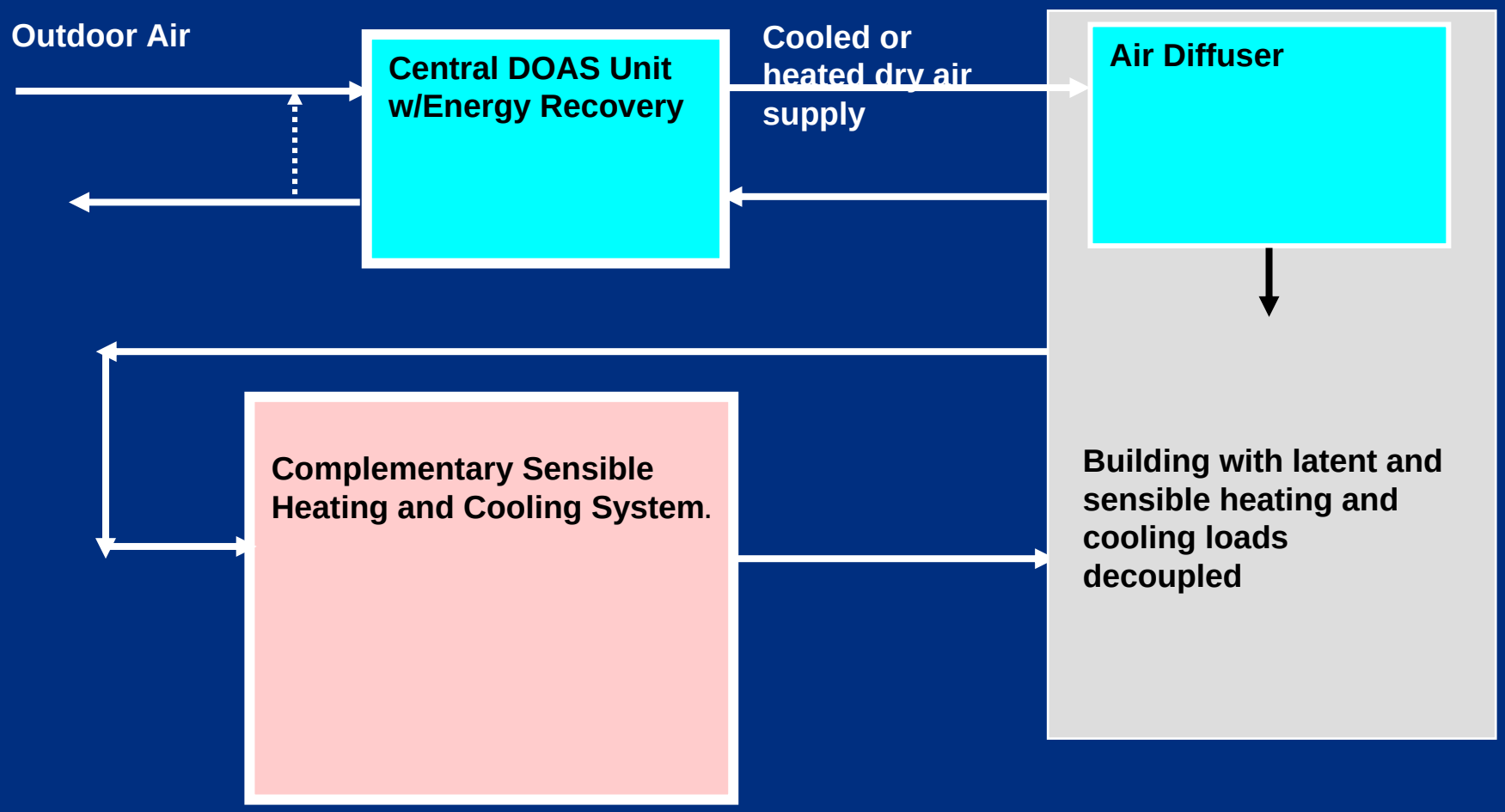

GovEnergy
www.govenergy.gov

Alexander Zhivov

August 3, 2008

Types of Complementing Heating and Cooling System for Barracks

- Radiant ceiling system (suspended or embedded into the ceiling)
- Fan coil units (four pipe or DX fan-coil units)
- Water source heat pump's
- Other packaged terminal equipment

Alexander Zhivov

Radiant Heating and Cooling System Vs. FCU

- FCU supplies air with a low temperature and creates a higher risk of condensation and mold
- FCU has mechanical parts which require more maintenance
- FCU requires lower chilled water T (45-50ºF Vs. 60ºF for radiant system) which creates a potential problem with condensation on piping/connection
- FCU supplies air with a lower temperature (55ºF) which creates a potential problem with condensation and mold on air diffuser and adjacent surfaces

GovEnergy
www.govenergy.gov

Alexander Zhivov

August 3, 2008

Radiant Heating/Cooling System

Installation of the capillary radiant heating/cooling system on the pre-finished surface

Two-side cooling mat detail with water feeding (or water return)

GovEnergy
www.govenergy.gov

Alexander Zhivov

August 3, 2008

Radiant Heating/Cooling System

- The chilled ceiling can provide capacity up to 25 Btu/sq.ft. This capacity is generally sufficient if the building is sufficiently insulated and has a DOAS
- Pipes and fittings are made out of polypropylene (plastic). Cooling and heating by Capillary Tubes is not new to the HVAC industry. It was used for commercial and institutional projects over Europe since last fifteen years. Has at least 2 suppliers BEKA, USA and KaRo. See www.beka-klima.de for list of completed projects.
- The capillary tubes (material only) for drywall/plaster or concrete is around $6.00/sq.ft. Additional $ 8.00/sq.ft. will be for installation.

Ft. Stewart DOAS Systems

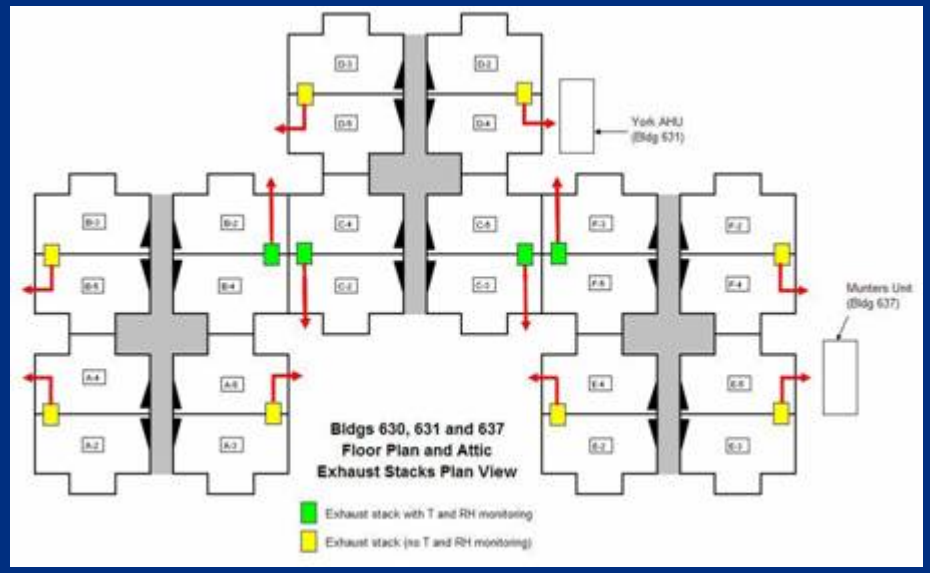

DOAS: chilled water system augmented with DX

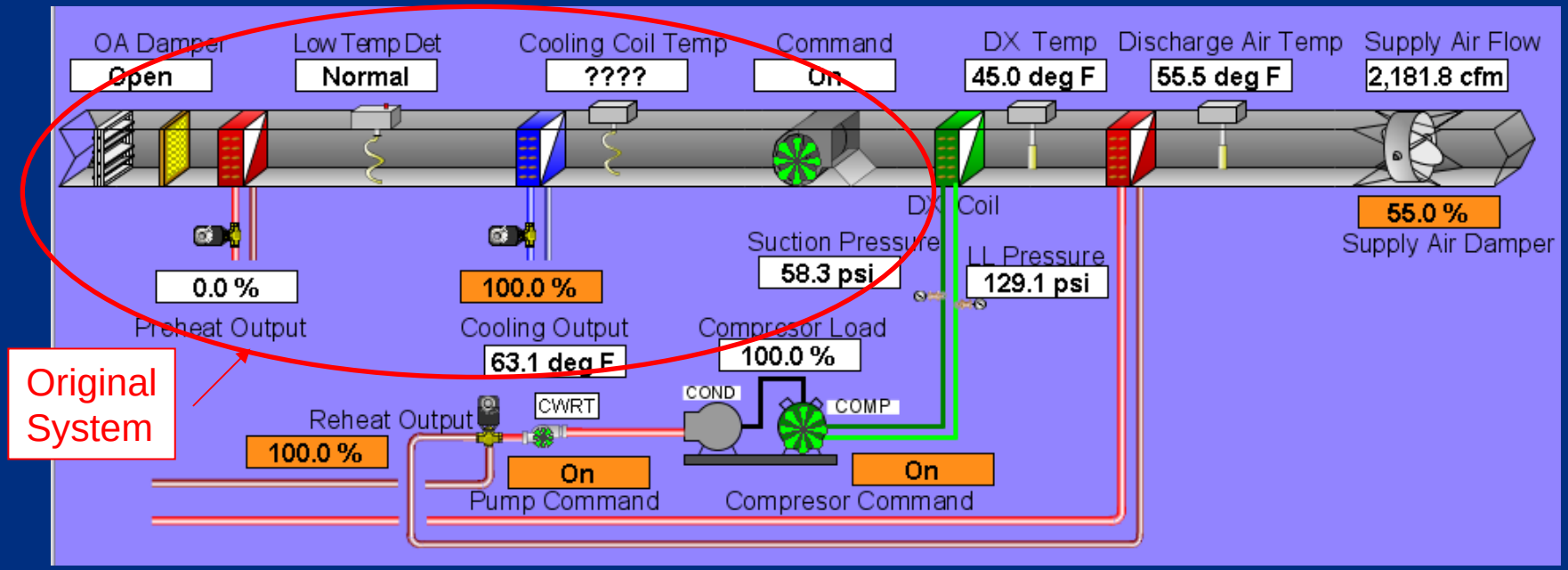

- Three existing attic outdoor air systems augmented with DX dehumidification systems and condenser reheat.
- OA air quantities increased 25% over original system

DOAS: DX Dehumidification/Reheat System Added to a Standard Commercial AHU

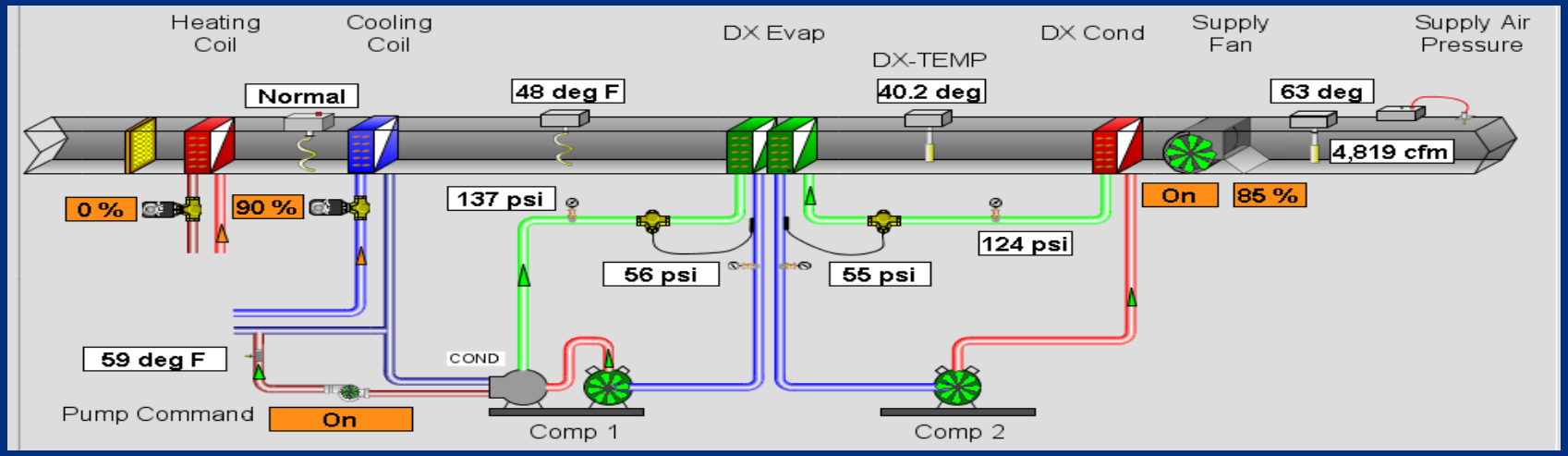

- Three existing attic outdoor air systems abandoned
- DX dehumidification/reheat system added to a standard commercial AHU, connected to existing ductwork.
- OA air quantities increased 25% over original system

DOAS with a Desiccant Dehumidification/Reheat

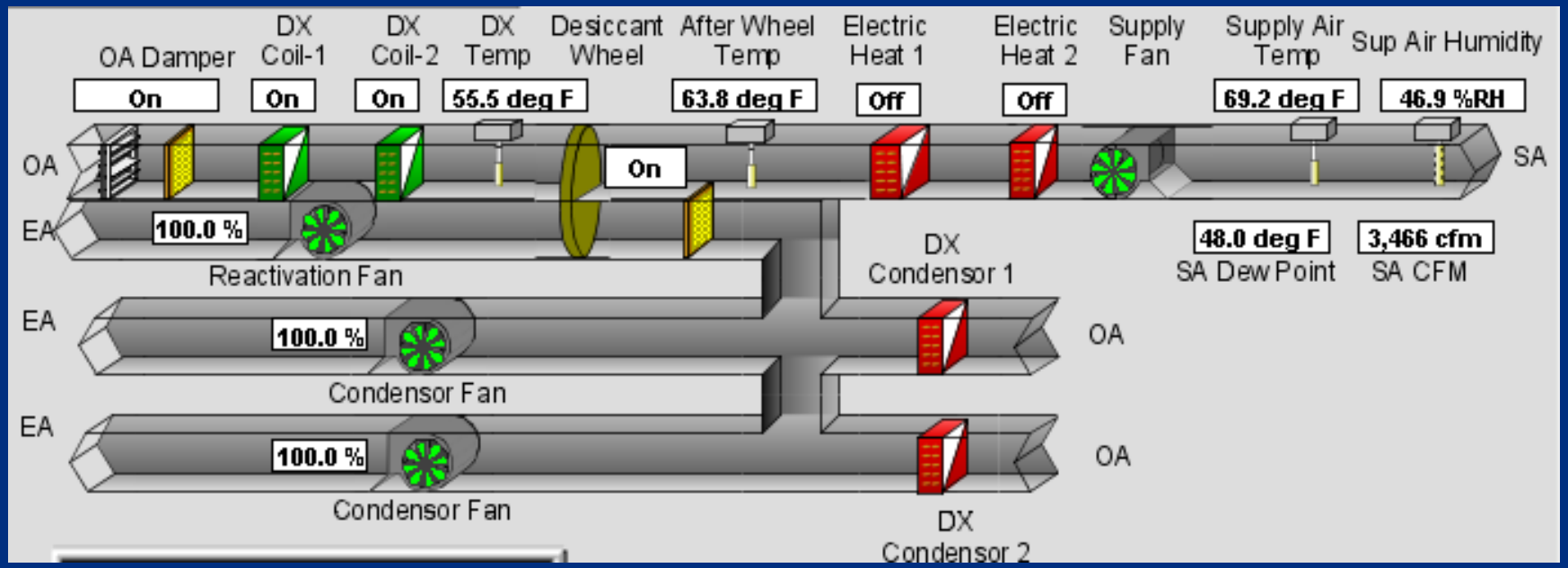

Three existing attic outdoor air systems abandoned

- All-electric desiccant dehumidification / reheat system installed and connected to existing ductwork.
- OA air quantities increased 25% over original system

DOAS Effect on Room Air Humidity in the Unoccupied Building

24 hours, Oct 23, 2007

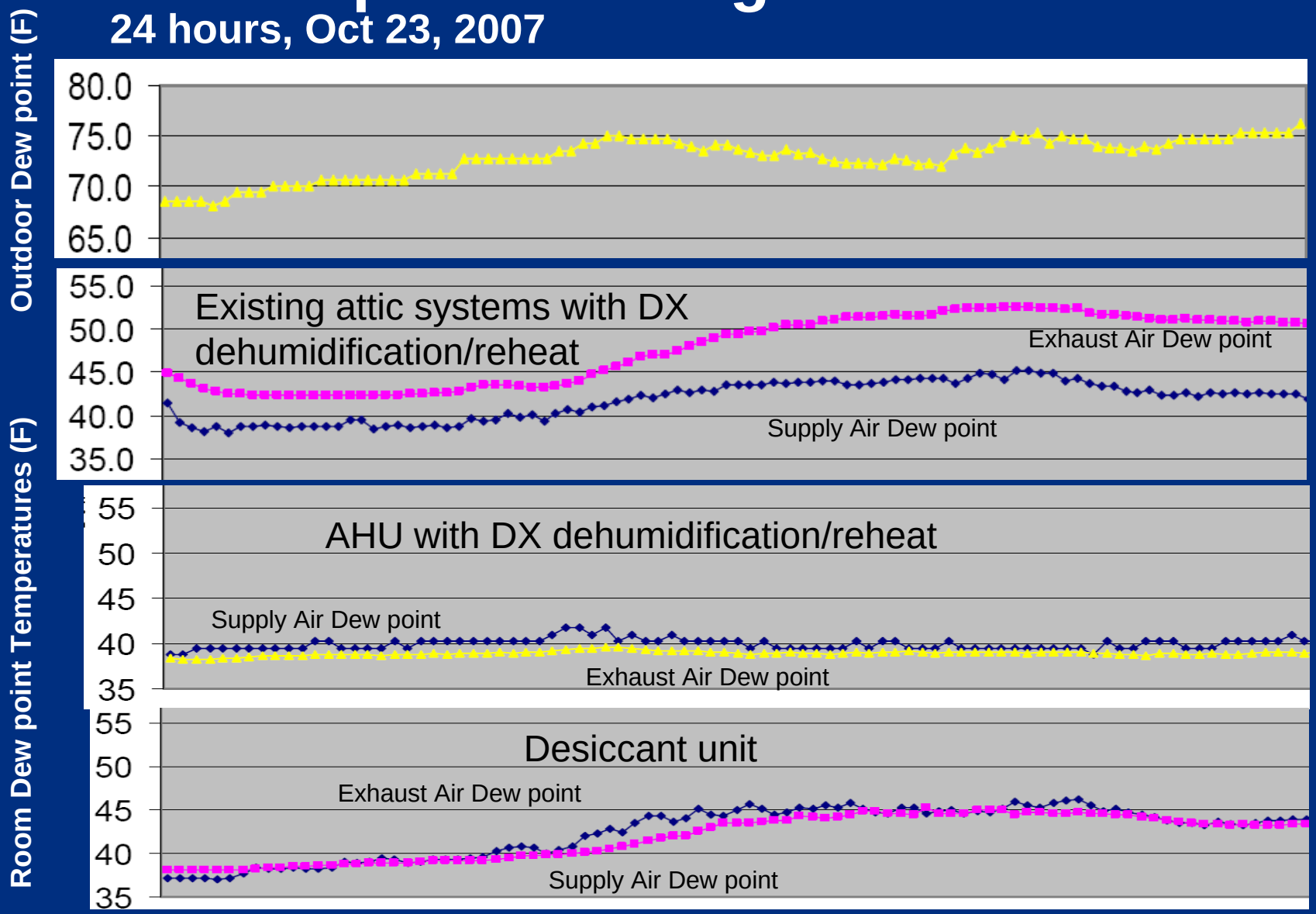

Baseline Occupied Building Performance

24 hours, June 6, 2008

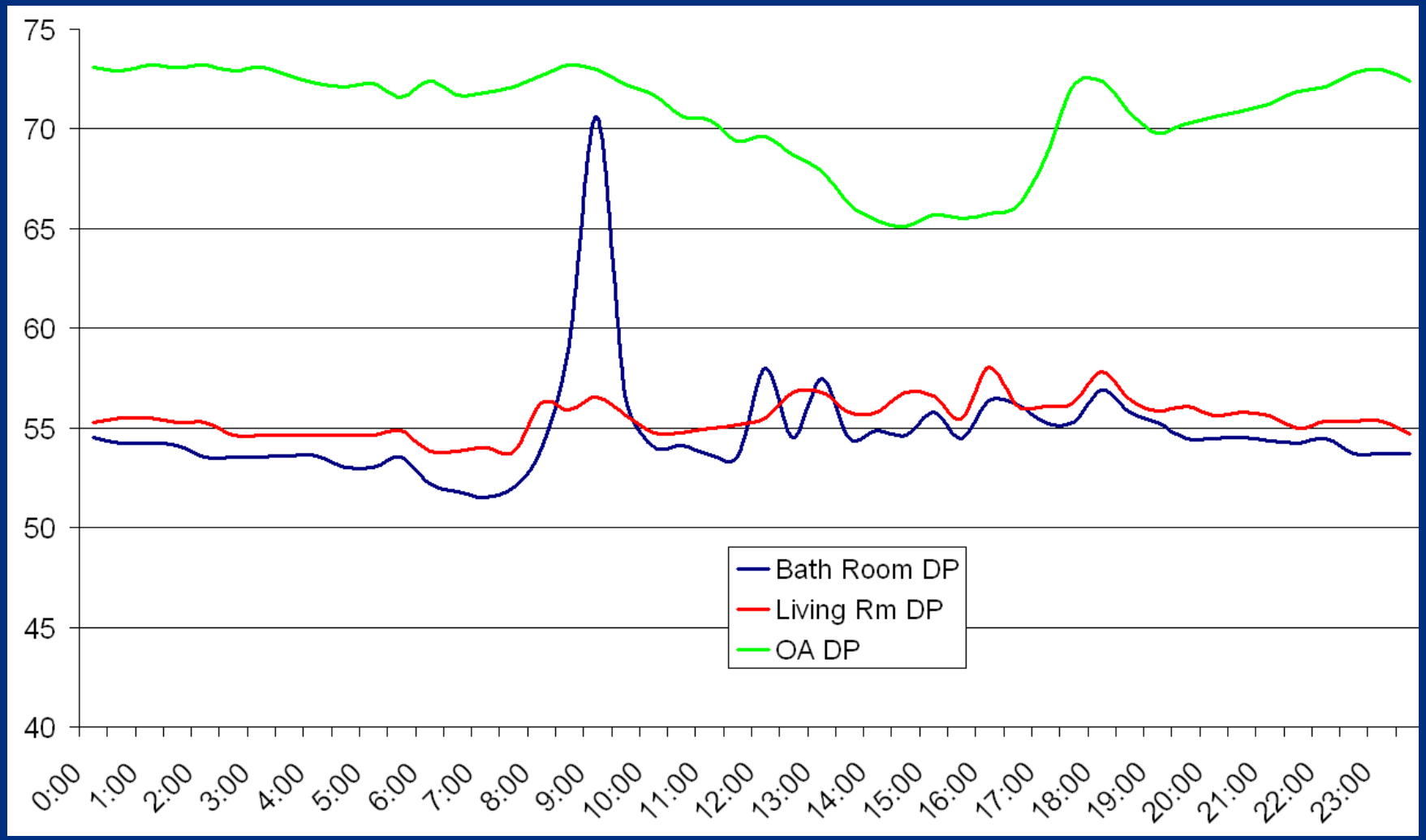

DOAS Effect on Room Air Humidity in the Occupied Building

AHU with DX dehumidification/reheat
24 hours, June 6, 2008

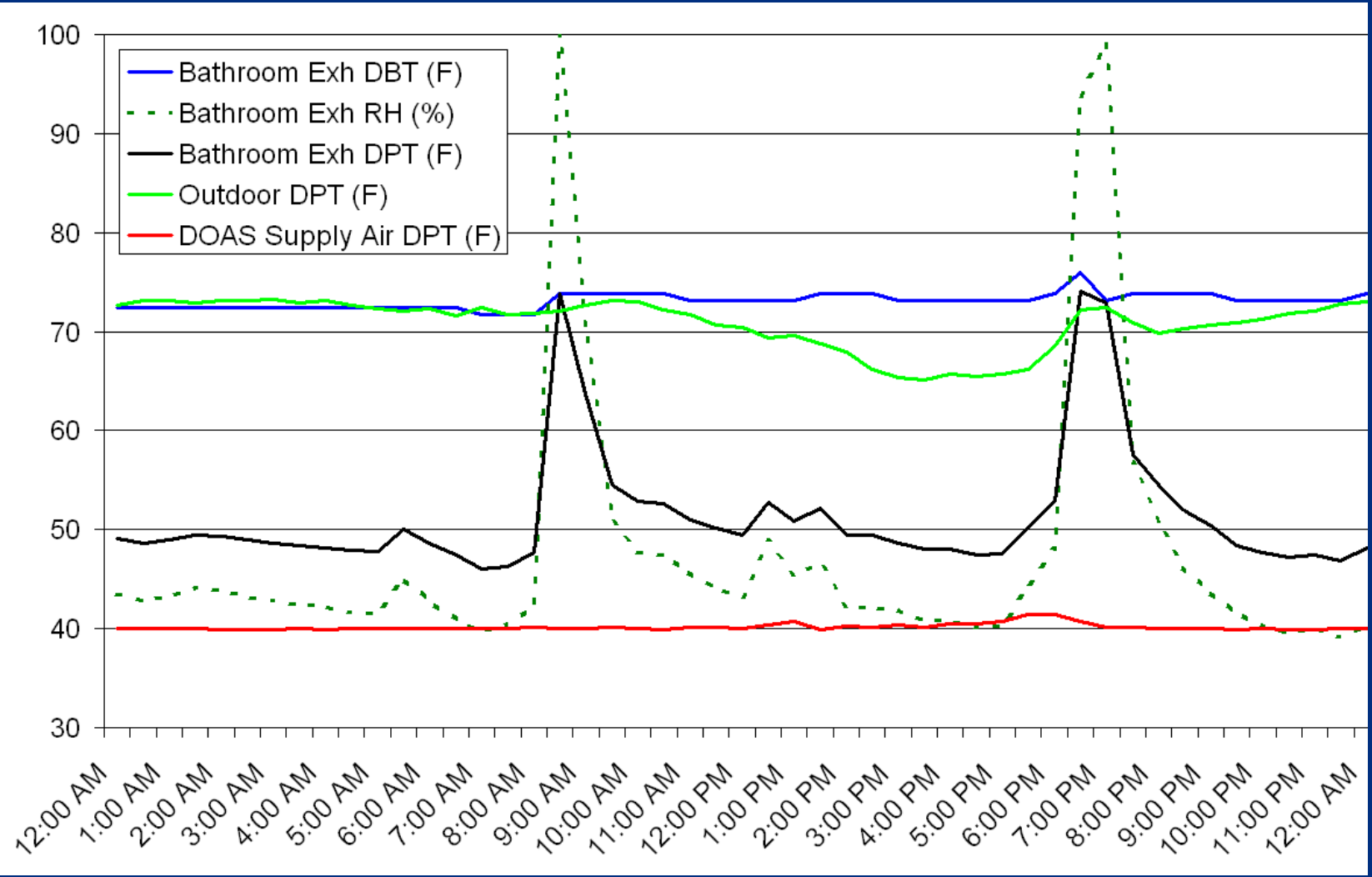

Conclusions

- DOAS works both in dry and humid climates
- DOAS allows control of the mold problem by supplying DRY air into the building and building pressurization;
- DOAS saves energy. Saving are greater when the building is periodically unoccupied (for a short or long period) and there is no need to maintain room air temperature;
- DOAS components are readily available on the market

Alexander Zhivov

What is needed to have the DOAS to work Right?

- Minimize the load: sensible and latent – insulate the building envelop (EIFS, attic), improve building air tightness (use inoperable windows, vestibules, no direct access from the room to outdoors, install continuous vapor barrier);
- Insulate cold pipes and ducts to achieve the surface temperature above the Dew Point (DP ~60oF)
- Sizing DOAS and complementing system, account for ALL sources of latent and sensible heat
- When FCU are used, supply air with the temperature above the DP
- When radiant cooling is used, utilize return chilled water from the DOAS AHU for the complimentary system (prevents cold surfaces and saves energy)

Alexander Zhivov

Would you like to know more about this session?

- Alexander Zhivov or James Miller
- USACE ERDC-CERL
- 2902 Newmark Dr., Champaign, IL 61822
- Alexander.M.Zhivov@erdc.usace.army.mil
  James.P.Miller@erdc.usace.army.mil

- Don’t forget to fill out and drop off your session evaluations.