GovEnergy
www.govenergy.gov

Charting a Course to Energy Independence

Providence, RI
August 9-12, 2009

Objectives

- Standard terms
- Sample electrical system
- Reliability calculations and analysis
  - Series and parallel electrical system components
  - Power system modeling
- Case study
  - Calculated availability vs. actual downtime
- Lessons learned

Standard Terms

- **Reliability** – The probability of a system performing its function adequately for the intended period of time and operational conditions
- **Availability** – The Probability of being energized – (9's)
- **Single Point-of-Failure** – Element or part of a system for which no backup (redundancy) exists and the failure of which will disable the entire system.
- **Mean Time To Repair (MTTR) (r)** – Mean time to repair the device and return to service (based on a statistical sample). (hr/f)
- **Mean Time Between Failures (MTBF)** – Mean time to repair the device and return to service (based on a statistical sample).
- **Failure Rate (λ)** – Number of Failures/Year for a device, (based on a statistical sample). (f/yr)
- **Contingency** – An unexpected or unscheduled event
- **Single Contingency** – One event is considered in the analysis
- **Double Contingency** – Two simultaneous events are considered in the analysis

Sample Electrical System

- Automatic primary selective and automatic main-tie-main 5000A 480-V substation

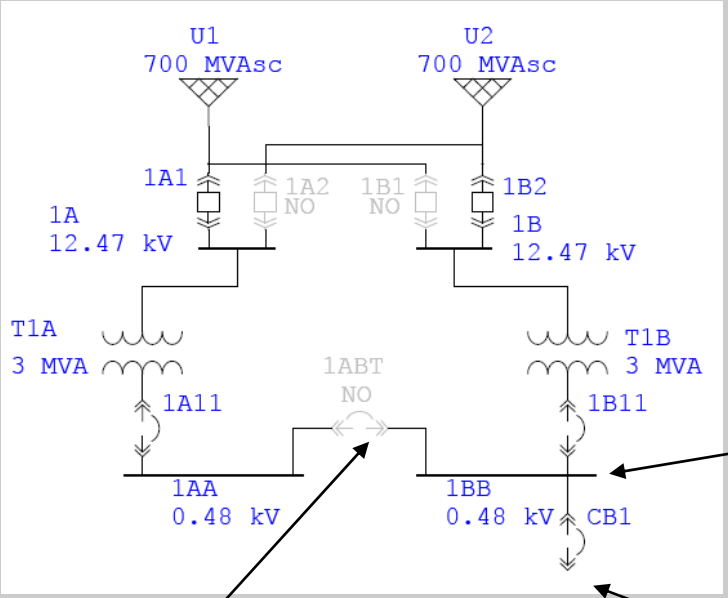

Bus 1BB – Single point of Failure for CB1

Tie breaker 1ABT – single point-of-failure for buses 1AA and 1BB

Critical load is fed from CB1

Reliability Analysis

Components in Series

- Transformer T1A and Breaker 1A11
  - Since a failure of either transformer T1A or breaker 1A11 will cause bus 1AA loose power, these devices are in series.

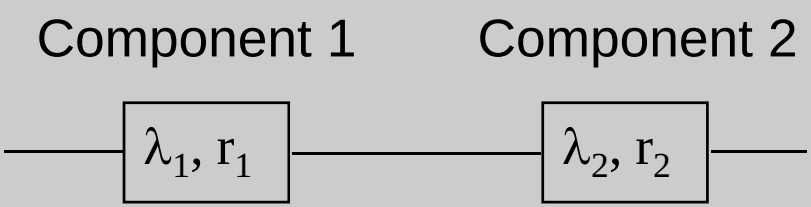

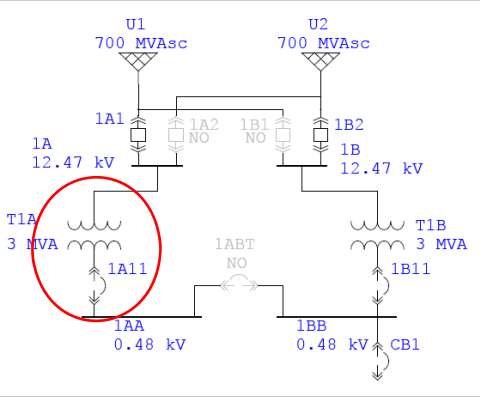

$$\lambda_{sys} = \lambda_1 + \lambda_2 \qquad r_{sys} = \frac{\lambda_1 r_1 + \lambda_2 r_2 + (\lambda_1 r_1)(\lambda_2 r_2)}{\lambda_{sys}} \approx \frac{\lambda_1 r_1 + \lambda_2 r_2}{\lambda_{sys}}$$

Reliability Analysis

Components in Parallel

- Breakers 1A1 and 1A2
  - Since either breaker can supply the load, they are considered parallel components.

Component 1

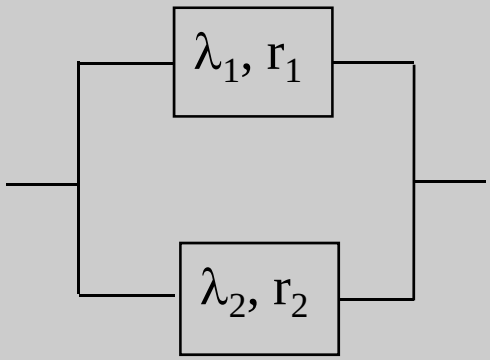

Component 2

$$\lambda_{sys} = \frac{\lambda_1 \lambda_2 (r_1 + r_2)}{1 + \lambda_1 r_1 + \lambda_2 r_2} \approx \lambda_1 \lambda_2 (r_1 + r_2)$$

$$r_{sys} = \frac{r_1 r_2}{r_1 + r_2}$$

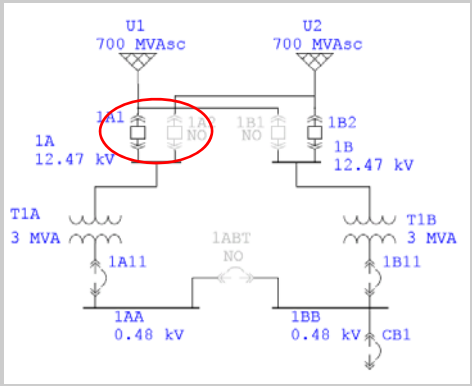

Software Results

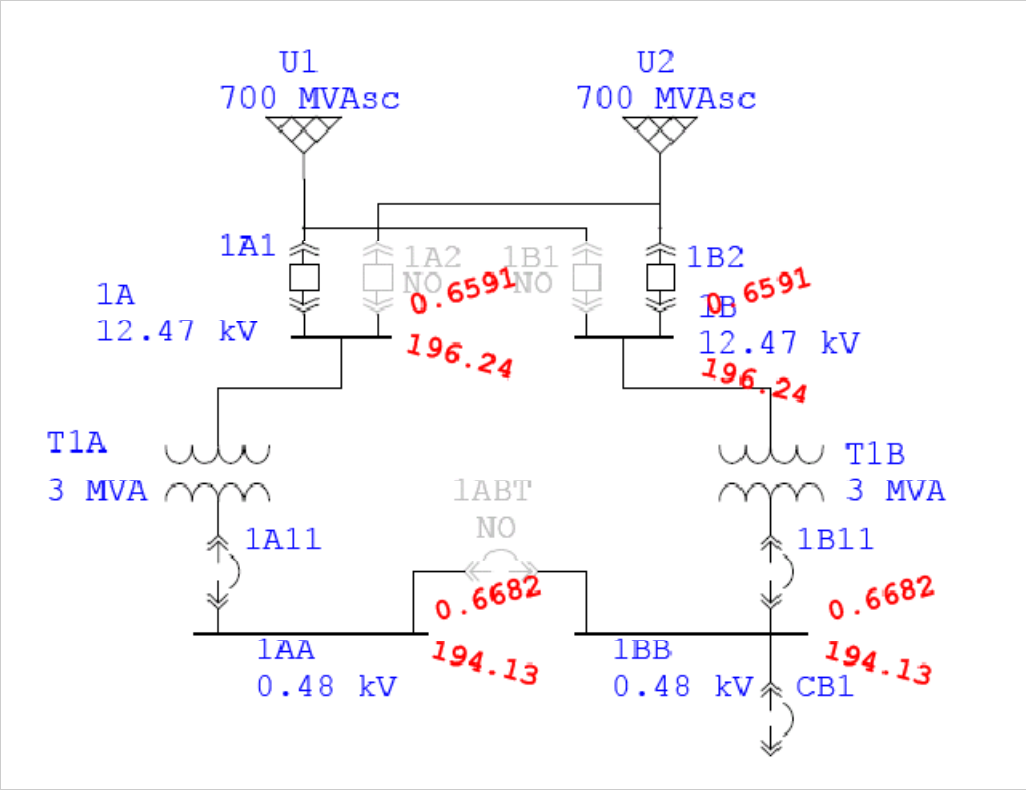

Results for bus 1BB Indicate 98.5% uptime

This is represents an average of 129hr/yr of anticipated downtime

(8760hr/yr – 129 hr/yr)/ (8760 hr/yr) = **98.5% Uptime**

Actual Event

Main breaker tripped as desired

OOPS

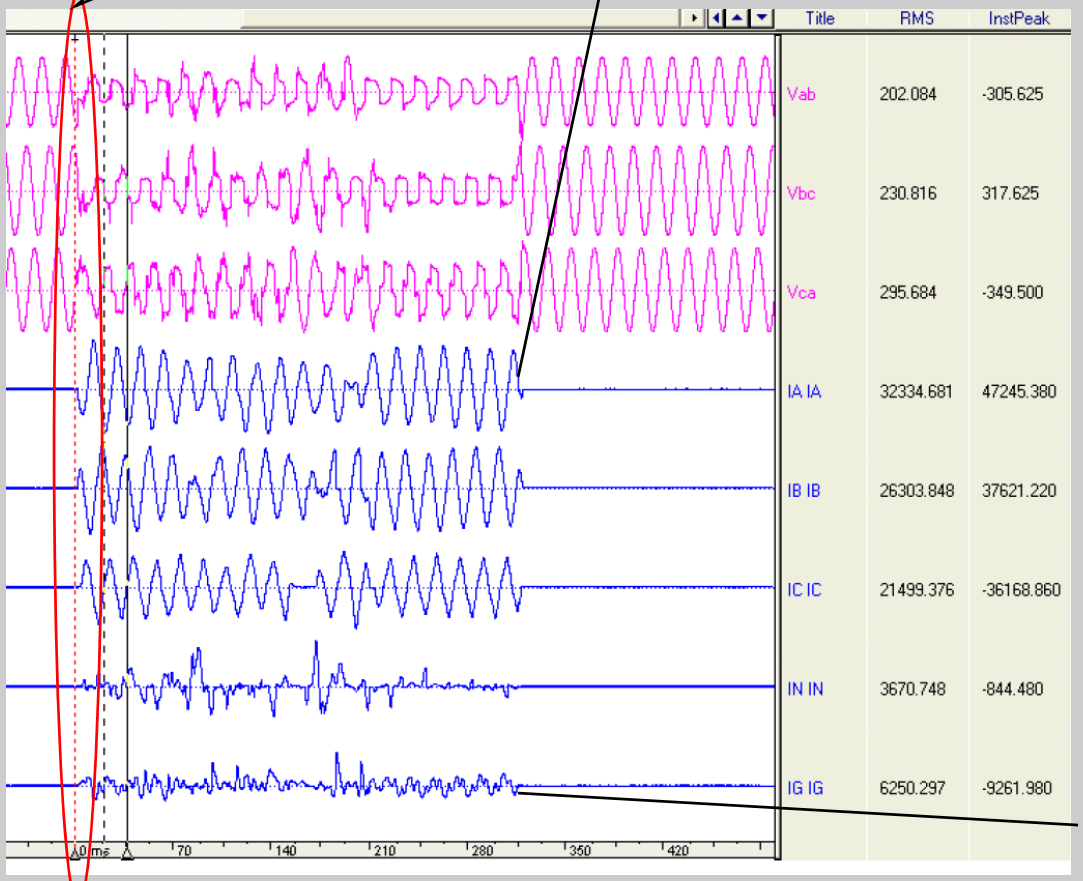

Parts left in a concealed location shorted main bus side of this breaker

Tie breaker (open) tripped as well

Calculated vs. Actual Downtime

- Calculated downtime = 129 hr/yr (average over system life)
  - All calculated values are statistical and are derived from equipment life data
- Actual downtime = 192 hr/yr (first year of life)
  - Actual values can be measured in the field.
  - Some years may be better/worse than others.

Lessons Learned

- Reliability/Availability Analysis
  - The results of the availability calculations are a useful benchmarking tool and can be used to compare alternate design options.
  - The process of determining single points of failure and outage tolerances are of great benefit.
    - Contingency plans
    - Real life exercises for operators

Questions

References

- IEEE Std. 493 “Gold Book”
  - Failure Rate Data and Calculation Methods
- Electric Power Distribution Reliability
  - Richard E. Brown

Would you like to know more about this session?

Jesse Hoffman
Chevron Energy Solutions
2600 Eagan Woods Drive, Suite 300
Eagan, MN 55121
jhoffman@chevron.com