GovEnergy
www.govenergy.gov

Charting a Course to Energy Independence

Providence, RI
August 9-12, 2009

Traditional Site Sub-Transmission Grid

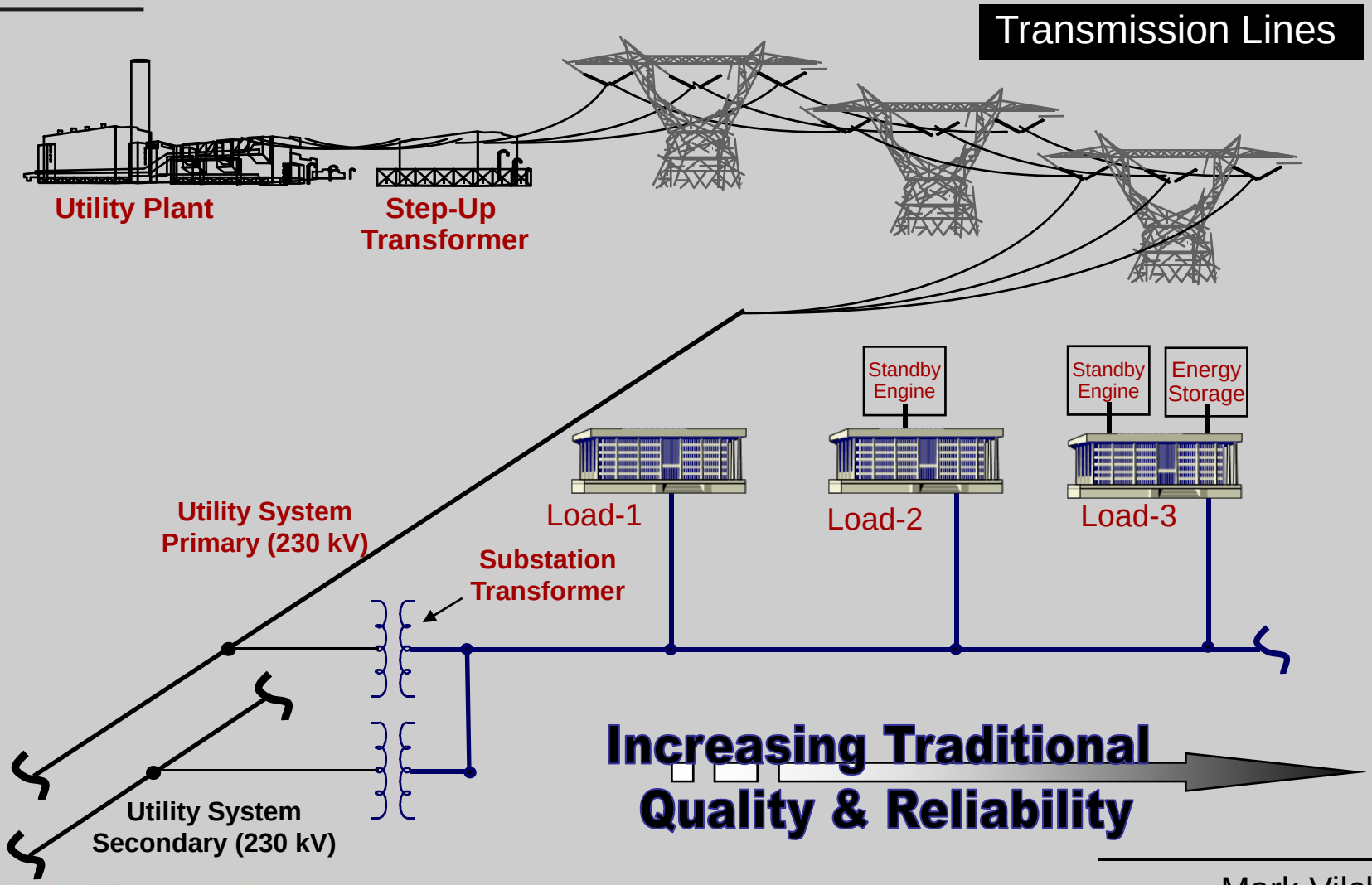

Grid Quality & Reliability Metrics

ITIC Curve

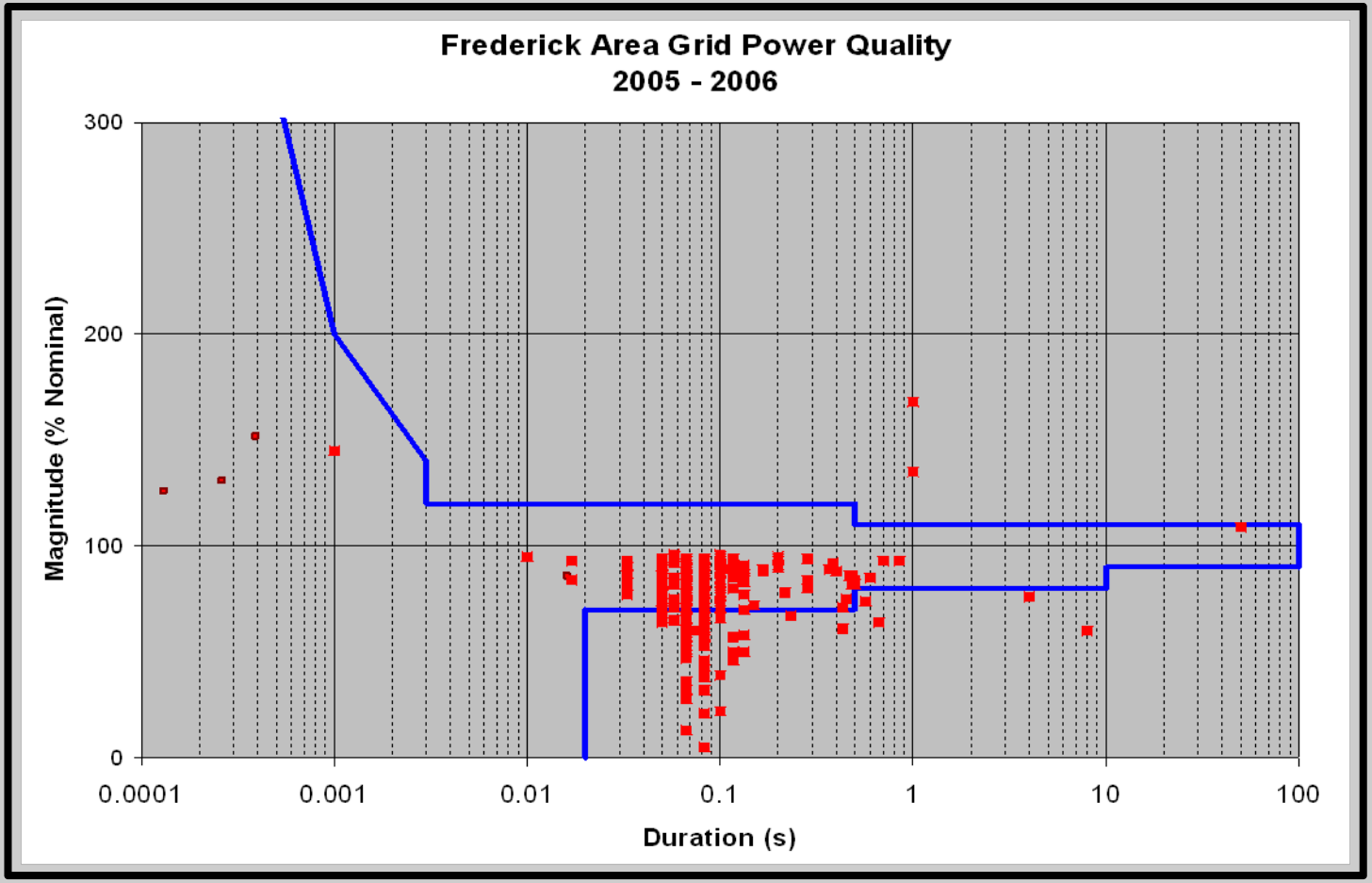

Aggregated US Grid Reliability Metrics

Increasing frequency of outages

Major influencing factors

- **Greater demand**
- **Aging infrastructure**
- ***RENEWABLES***

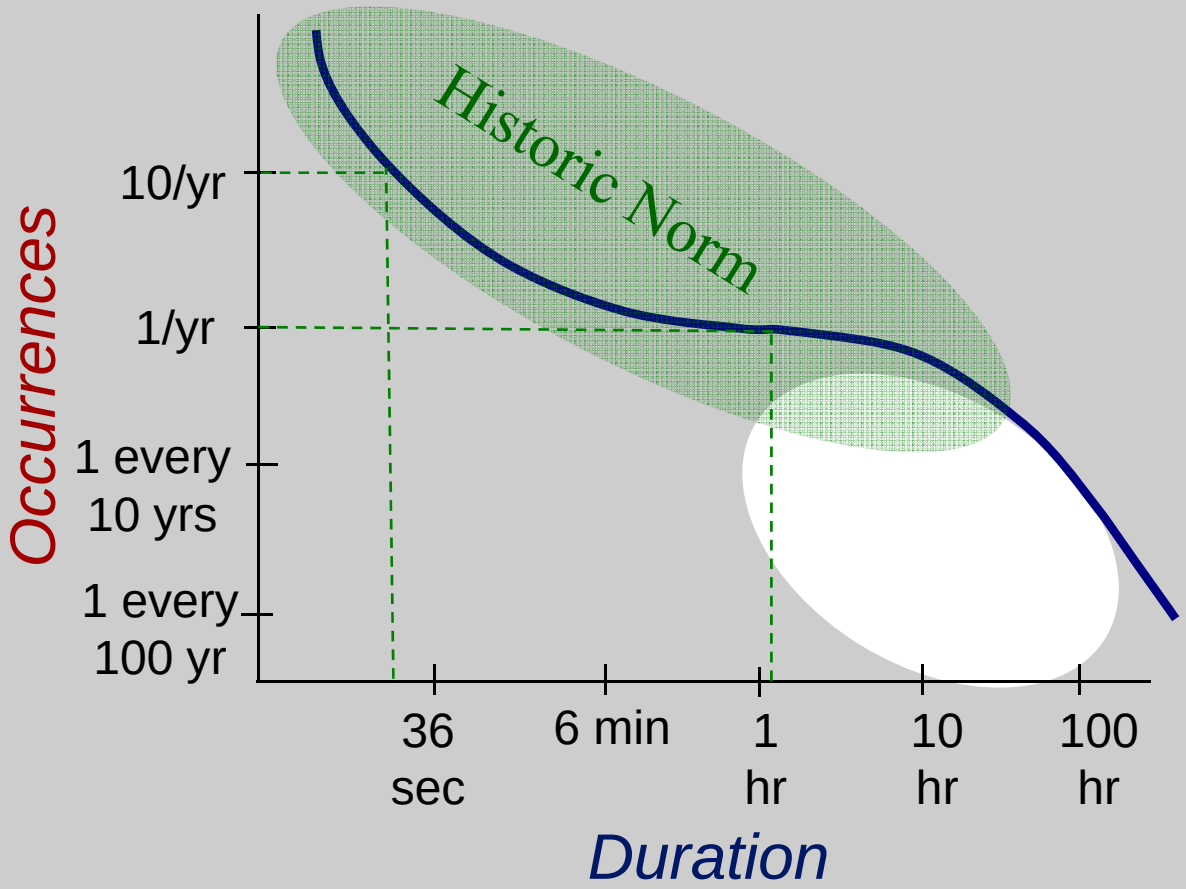

Traditional Sub-transmission Grid Reliability

Effect of dedicated attacks

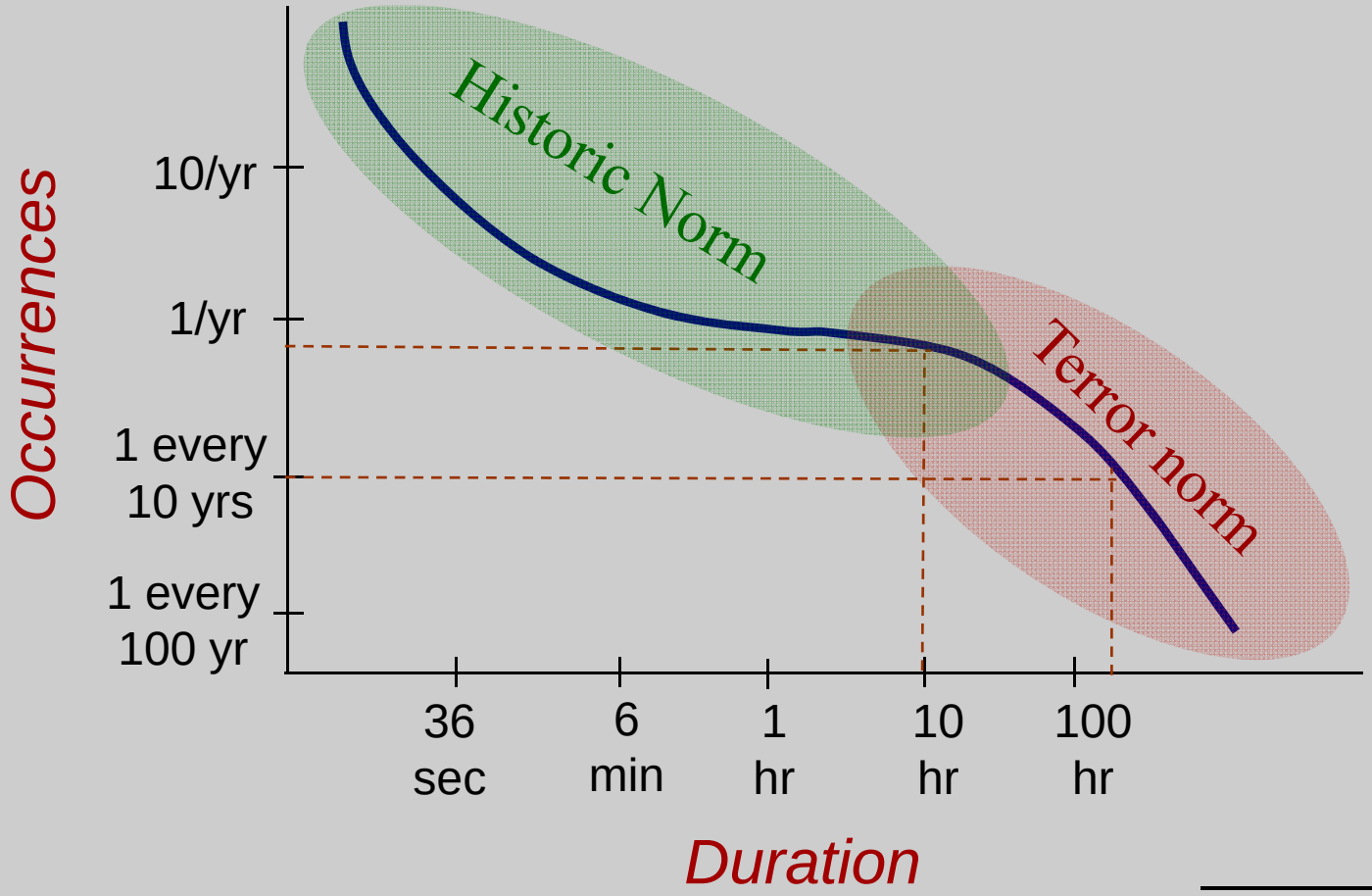

Traditional Sub-transmission Grid Reliability

Microgrids

- **Disperse sources of generation**
- **Reduce single points of failure**
- **Secure fuel supply**
  - **Maximize utilization of renewables**
  - **Include on-site fuel/energy storage**
- **Run stabilization assets full-time**
  - **Diesel Uninterruptible Power Supply (DUPS)**
  - **Energy Storage**
- **Use proven and reliable technologies**

MicroGrid Example

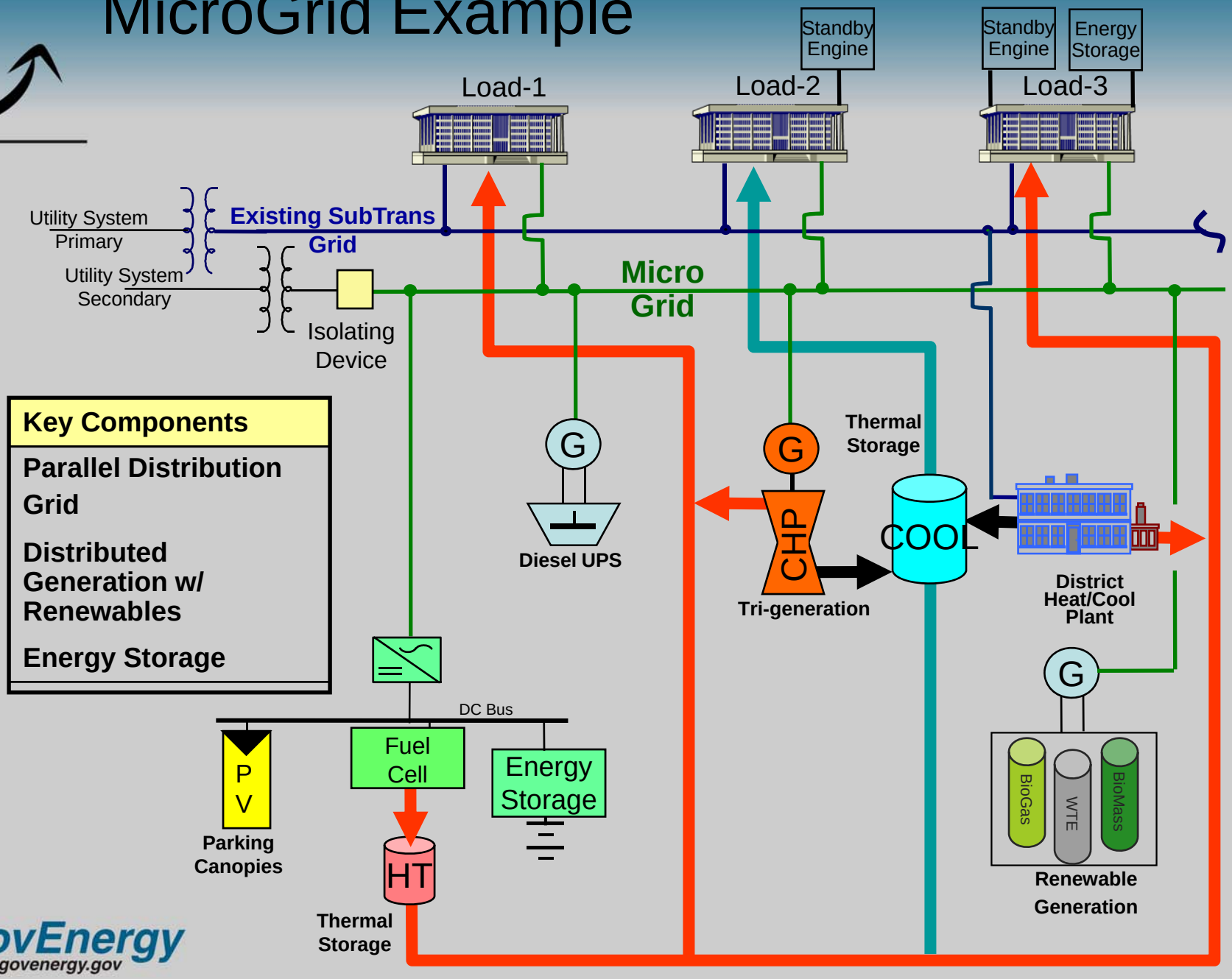

GovEnergy
www.govenergy.gov

Generation Options for MicroGrids

- **Photovoltaics (.01 – 20,000 kW)**
- **Fuel cells (5–10,000 kW)**
- **Microwind (0.2–5,000 kW)**
- **Energy storage (1–10,000 kW)**
- **Microturbines (30–250 kW)**
- **Combined Heat and Power (CHP: 300–10,000 kW)**
- **Combustion Turbines (300–10,000 kW)**
- **Internal Combustion Engines (1–10,000 kW)**

Energy Storage & Stabilization Options for MicroGrids

- **Thermal Energy Storage (5,000–100,000 Ton-Hrs)**
- **Flywheels (MW-seconds)**
- **Li-ion/Ni-Cd Batteries (MW-seconds)**
- **Lead-Acid Batteries (MW-minutes)**
- **Flow & Metal-Air Batteries (MW-hours)**
- **CAES (MW-hours)**

Potential MicroGrid Phased Integration
Phase-0 (Diagram)

Install Parallel Subtransmission Distribution

- New parallel grid to serve as Microgrid
- Allow for independent operation and long term islanding from utility grid
- Increased Reliability
  - **Additional Feeder to Loads**
  - **"Product divided by Sum"**

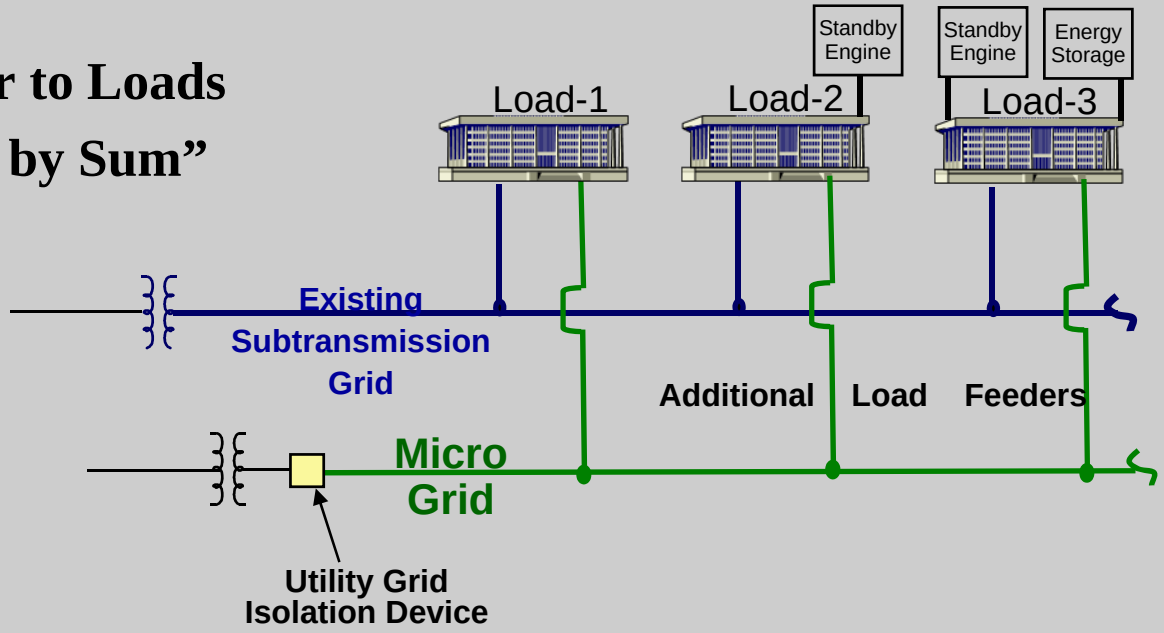

MicroGrid Phased Integration
Phase-0 (Site)

MicroGrid Routing

- **"Backbone" of a Microgrid**
- **ID Distributed Generation Point of Connects**
- **ID Energy Storage Locations**
- **ID Critical Load Centers**

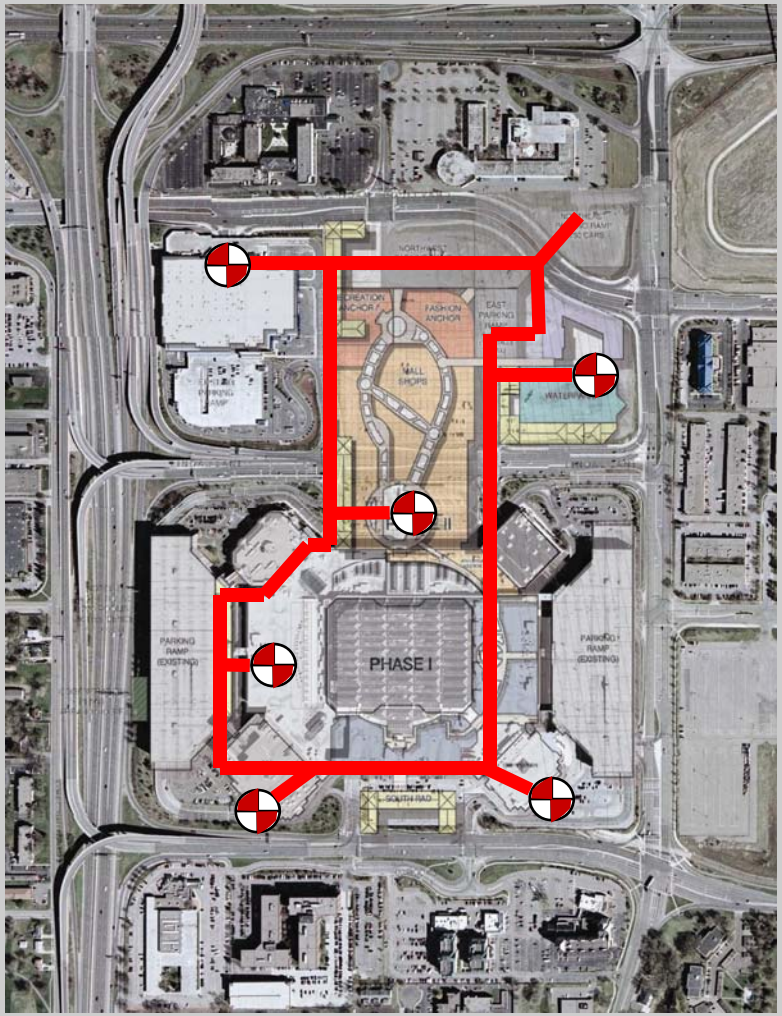

Potential Microgrid Phased Integration
Phase-1a (Diagram)

Begin Distributed Generation Installation

- Technology selection
  - Lowest Risk/Highest Probability for Success
  - Onsite Fuel Source / Long Term Islanding
  - Favorable ROI / NPV
  - Reliability / Stability / Quality
  - Green / Sustainable
  - Modularity / Cycle-time
- Photovoltaic Solar Generation
  - Ground-Based Parking Canopies
  - Parking Deck (Top) Parking Canopies
  - Off-site fabrication
  - Fast-track installation
  - Limited site disruption

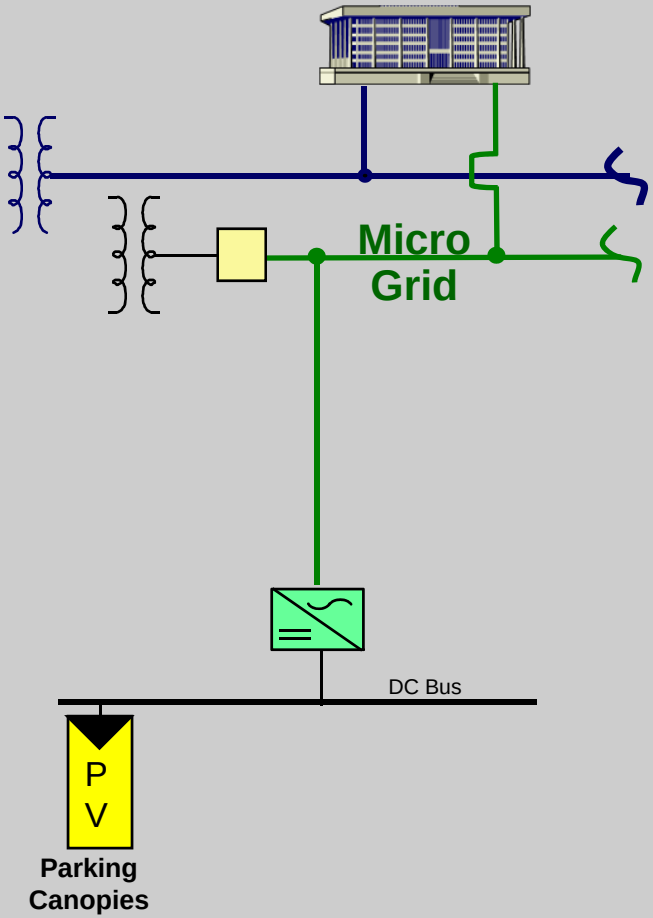

Potential MicroGrid Phased Integration

Phase-1a (Site)

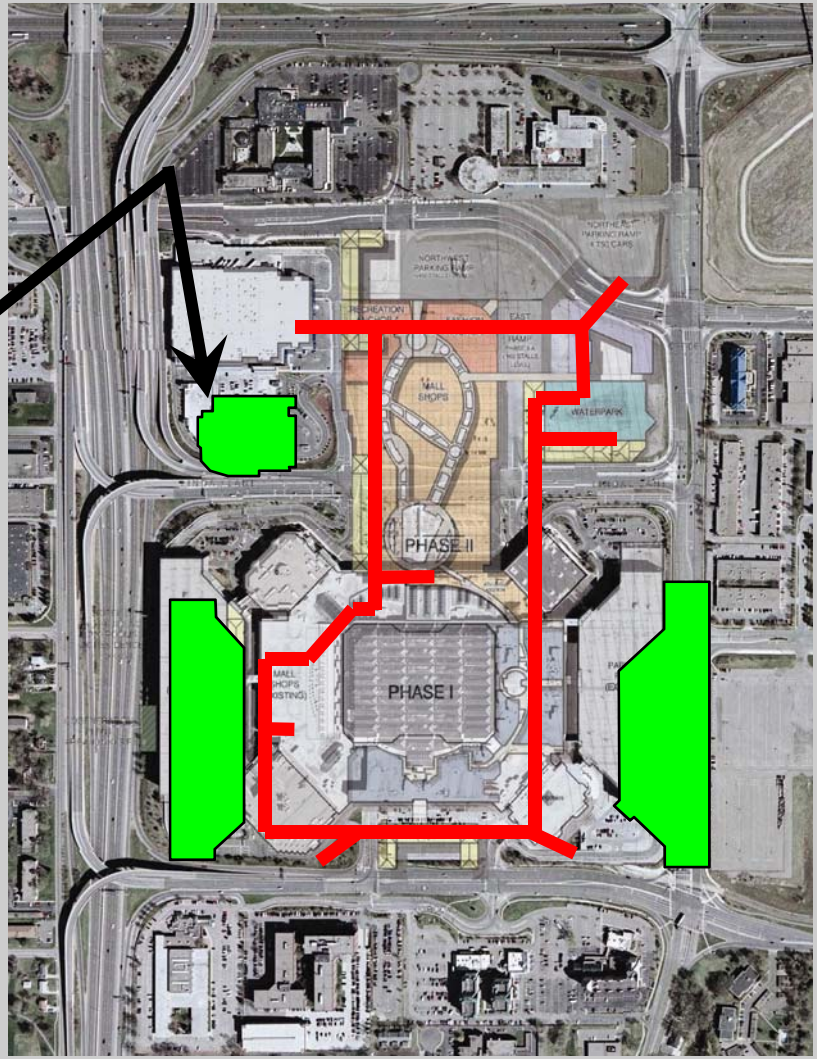

- Surface Parking ~ 20 acres
- 4 MWe Solar Canopies

GovEnergy
www.govenergy.gov

Canopy Styles

Solar Parking Structures

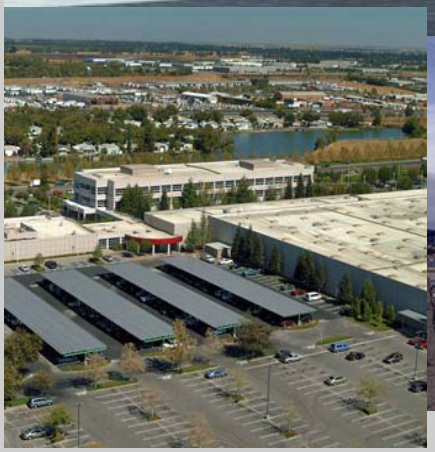

Potential Microgrid Phased Integration
Phase-1b (Diagram)

Convert to Dispatchable

Install MicroGrid Energy Storage and Stabilization Equipment

- Large Scale Battery Storage
  - Flow Battery
  - Metal / Air
  - Load Shaping
  - MW-hrs of Storage Capability
  - Dispatchability
- Diesel UPS
  - Flywheel Energy Storage coupled to Diesel Generator
  - Short-Term Energy Storage
  - Stabilize Renewable Intermittency
  - Long-Term Islanding
  - Five 9's availability
  - Power Quality

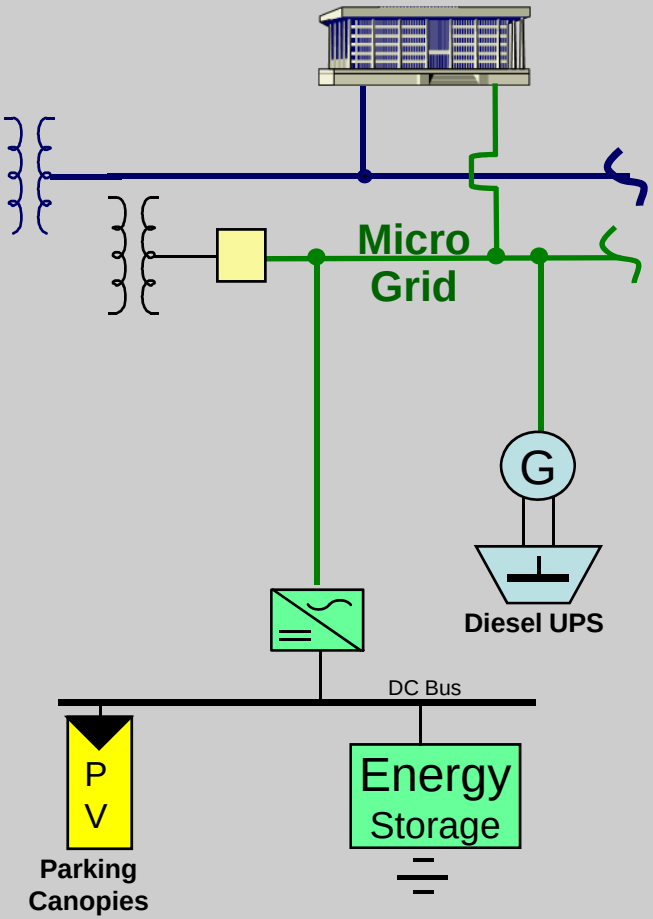

Potential Microgrid Phased Integration

Phase-1b (Site)

Diesel UPS (DUPS) Cross-Section

Flow Battery Schematic

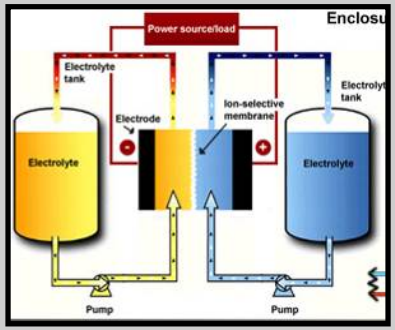

MicroGrid Energy Plant (MEP)

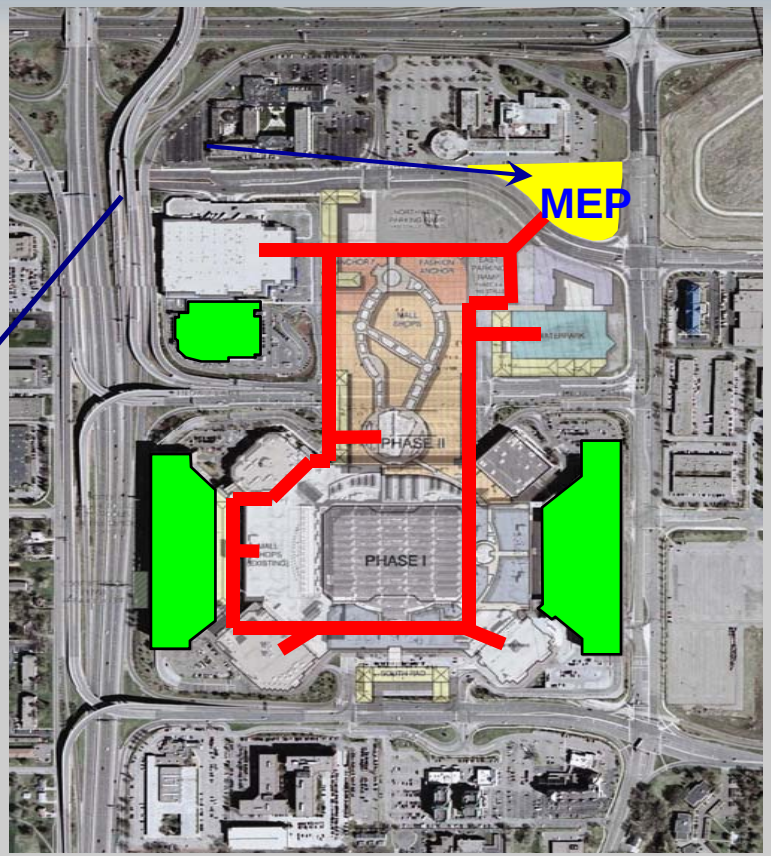

GovEnergy
www.govenergy.gov

Mark Vilchuck

August 9-12, 2009

Potential MicroGrid Phased Integration
Phase-2 (Diagram)

Add Efficiencies & Utilities

Install Thermal Distribution, CHP Generation & Thermal Energy Storage (TES)

- Off-load heating/cooling demand from existing facility infrastructure
- Free up MWs of peak demand
- TES allows for minimum permitting / fast track construction
- Improved HVAC performance
  - Low temp chilled water

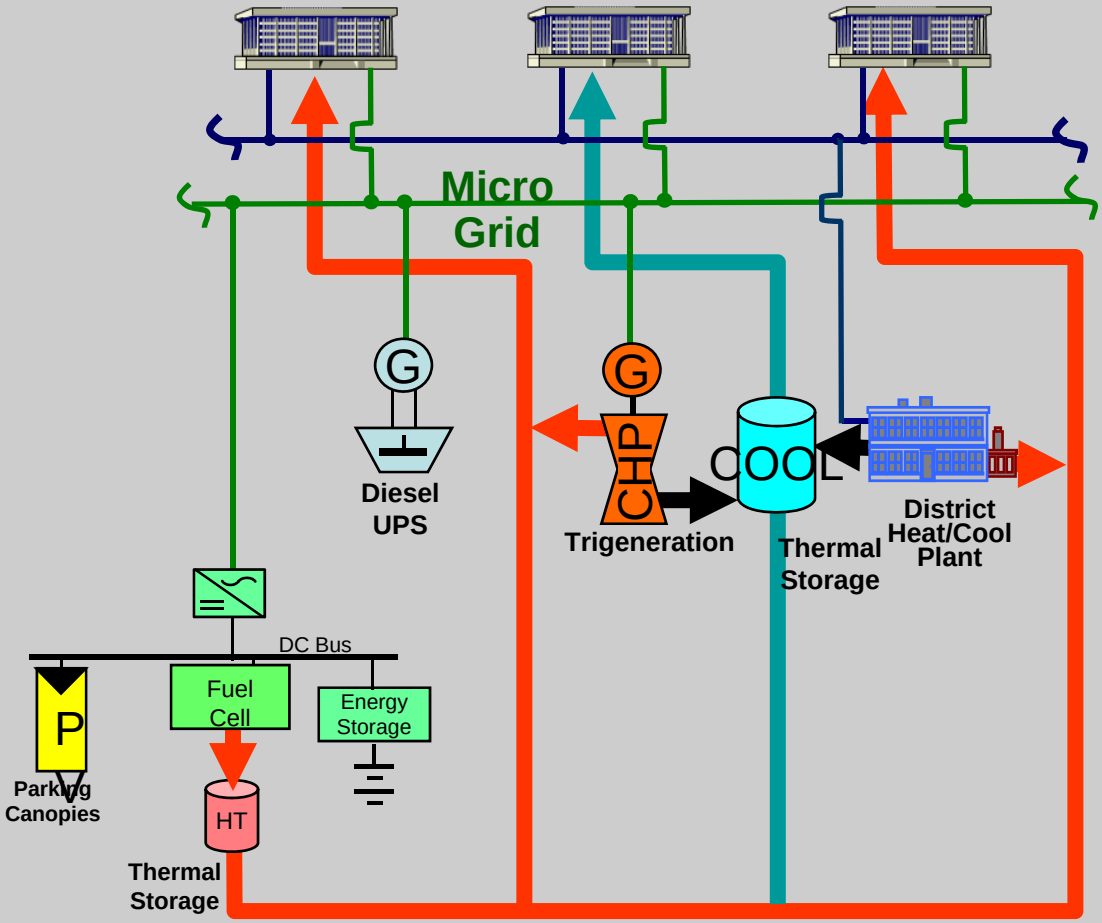

Potential MicroGrid Phased Integration
Phase-2 (Site)

TES – 27,000 T-Hrs
(Fort Detrick - NIBC)

Cogeneration 75 MW
(Chevron Kern River)

District Heat 50 MMBTU
(Picatinny Arsenal)

District Cooling 5,000 T
(Univ. of Utah)

Fuel Cell – 2.2 MW
(California)

20 MW MicroGrid
(Fort Detrick)

Install Thermal Distribution, Dispatchable Generation & Energy Storage (TES)

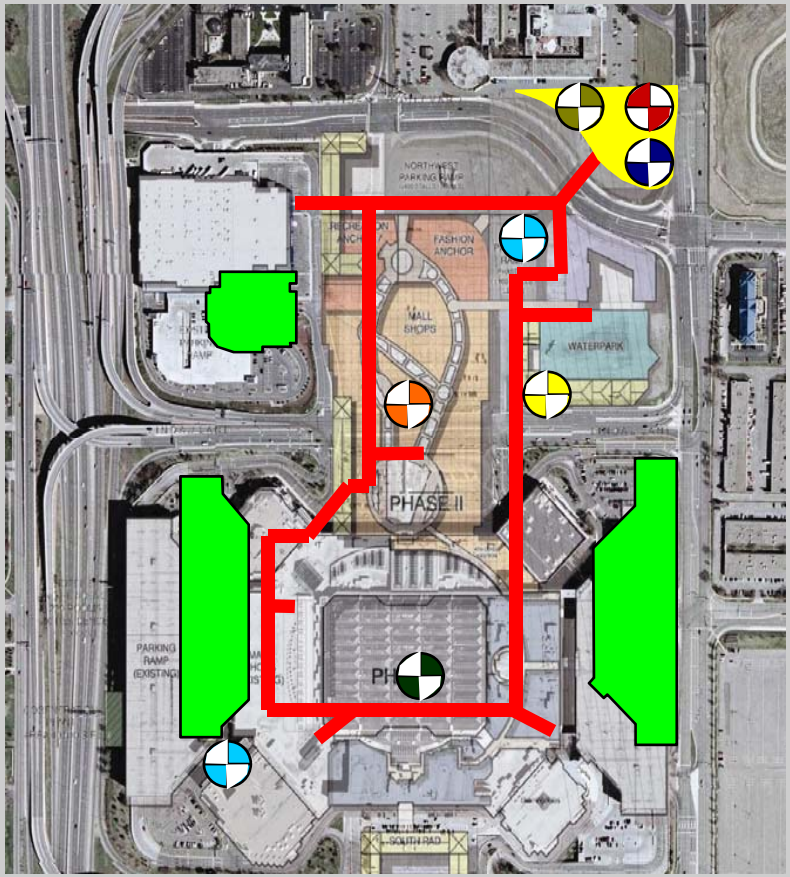

GovEnergy
www.govenergy.gov

Potential MicroGrid Phased Integration
Phase-3 (Diagram)

Add Renewable Assets

Integrate innovative renewable generation assets into the MicroGrid

- Biogas WTE
  - Anaerobic Digestion
  - Organic & Cellulosic Feedstock
  - Waste Food
  - Shredded Paper
  - Wastewater Sludge

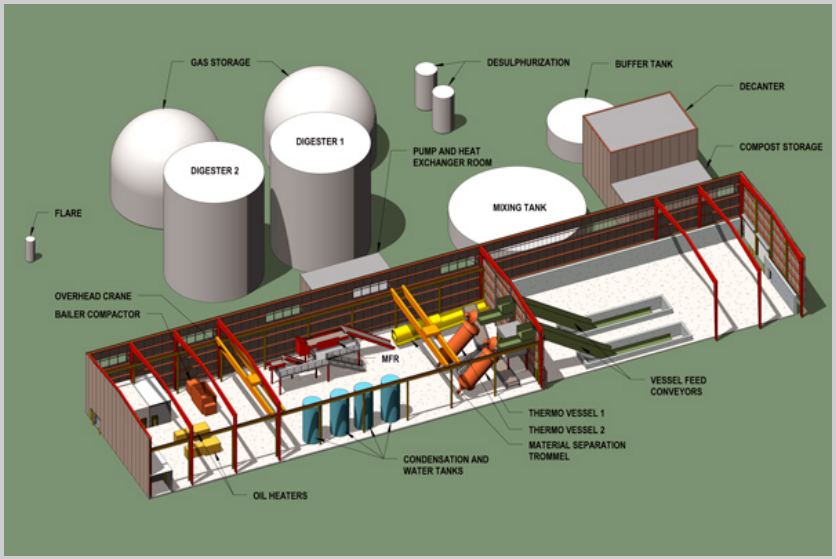

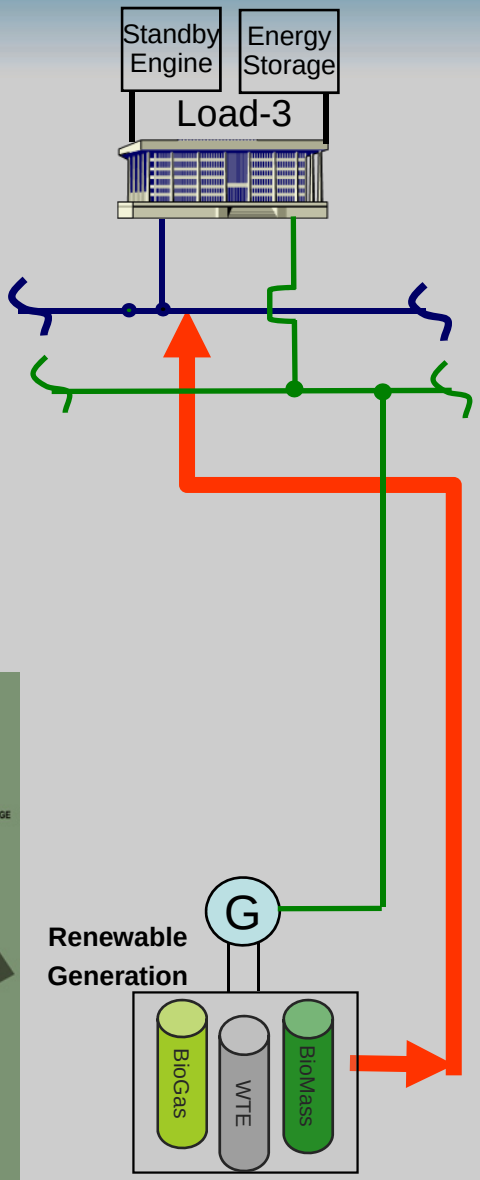

GovEnergy
www.govenergy.gov

Attributes and Benefits

- Supports a phased and modular implementation of significant renewable energy in a reliable manner
- Stable, flexible, and reliable
- Modular, scalable, building-block approach
- Allows for an affordable, iterative development approach—pay as you go

Would you like to know more about this session?

Mark Vilchuck
Chevron Energy Solutions
2600 Eagan Woods Drive, Suite 300
Eagan, MN 55121
mvilchuck@chevron.com