GovEnergy
www.govenergy.gov

Charting a Course to Energy Independence

Providence, RI
August 9-12, 2009

Better Economizer Controls

Jay Stein
Exec VP
E SOURCE
Boulder, CO

This One Really Is Broke

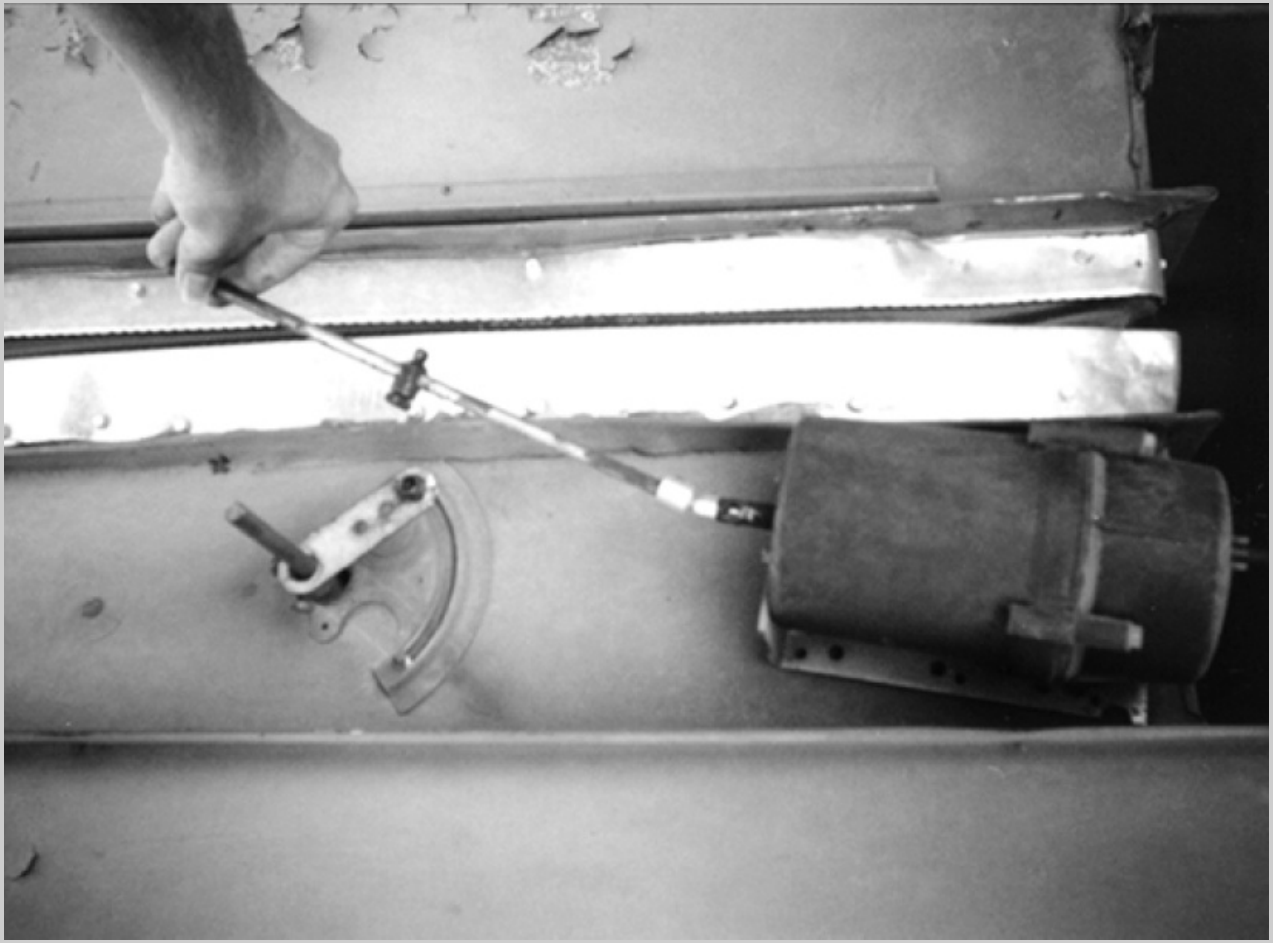

© E Source

Economizers 101

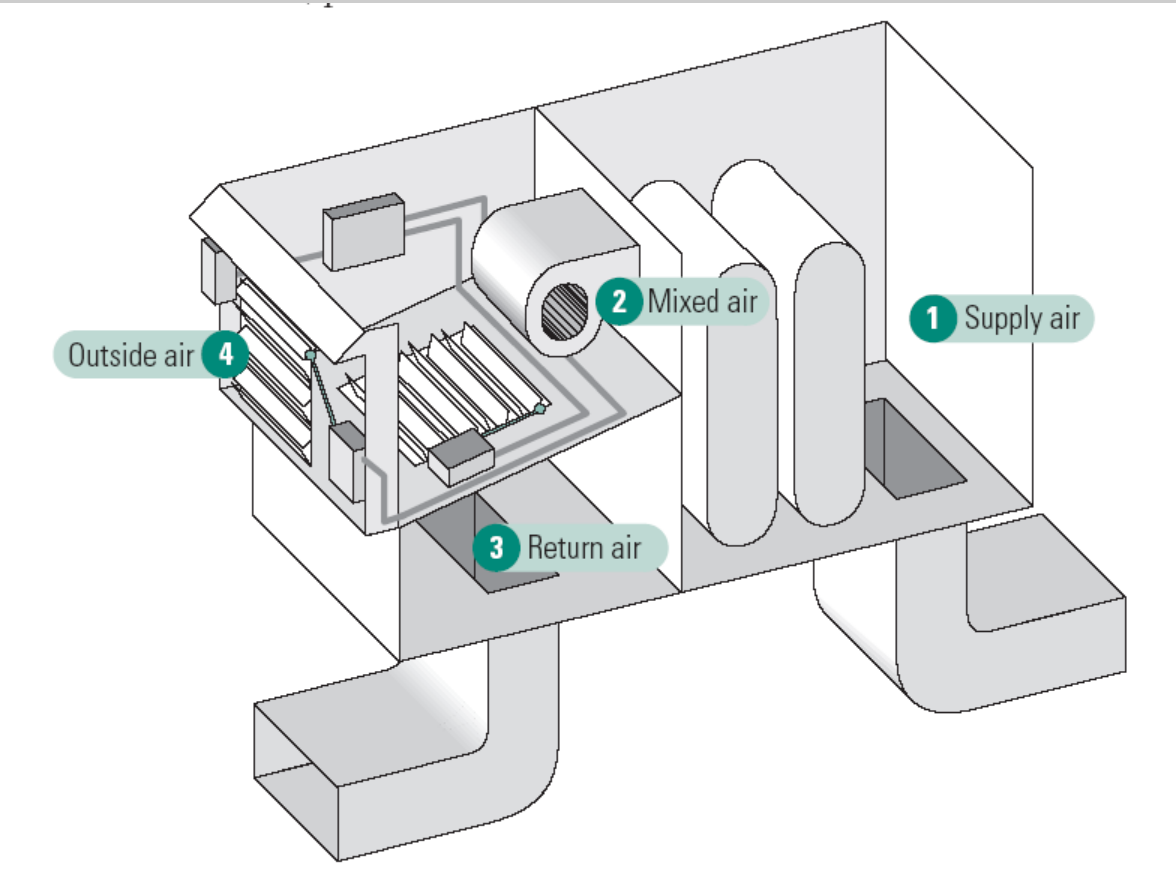

© E Source

Example of Economizer Operation

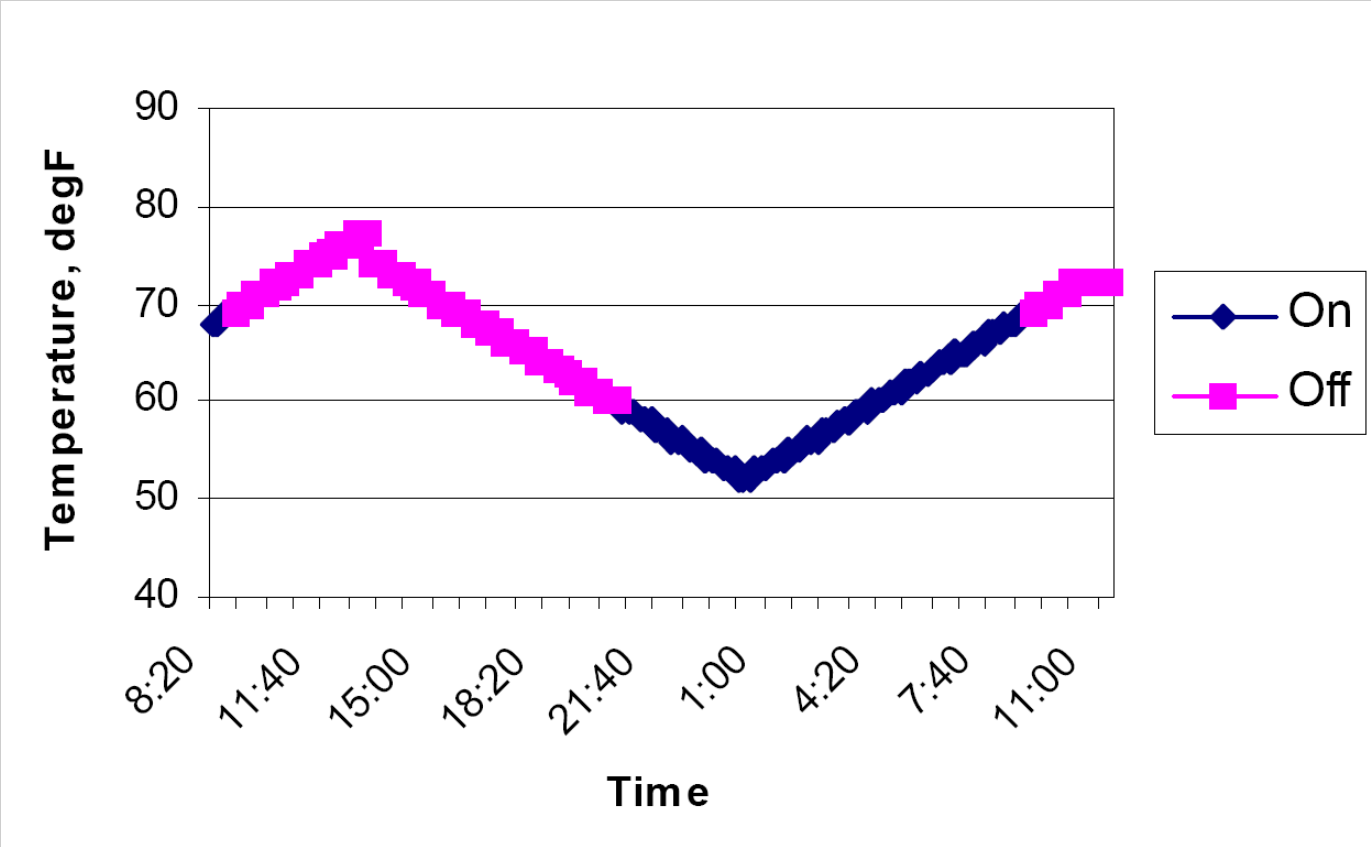

Courtesy: New Buildings Institute

Not Much Margin for Error

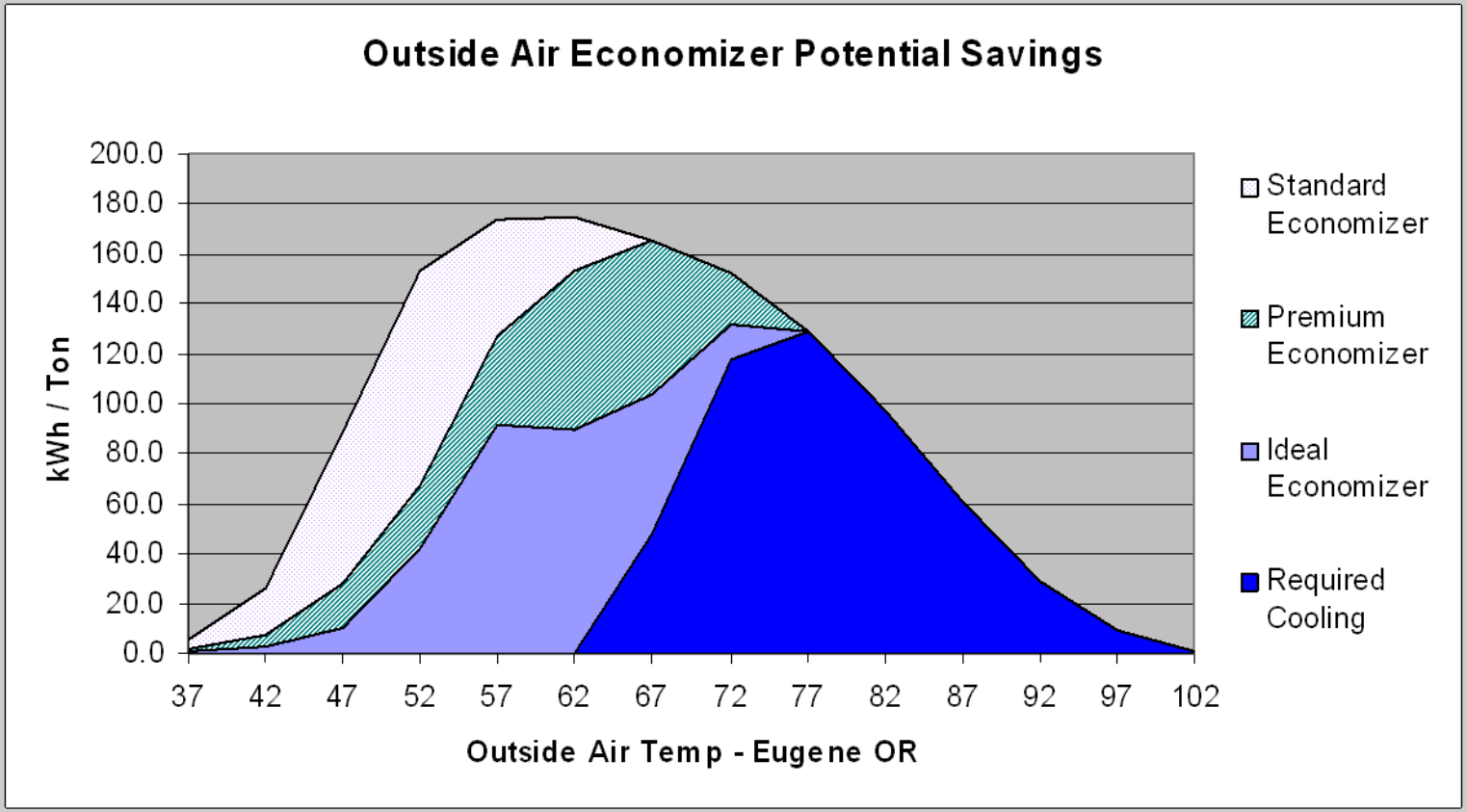

Courtesy: Reid Hart, PECI

The Laboratory

Courtesy: New Buildings Institute

Low-Temperature Bias

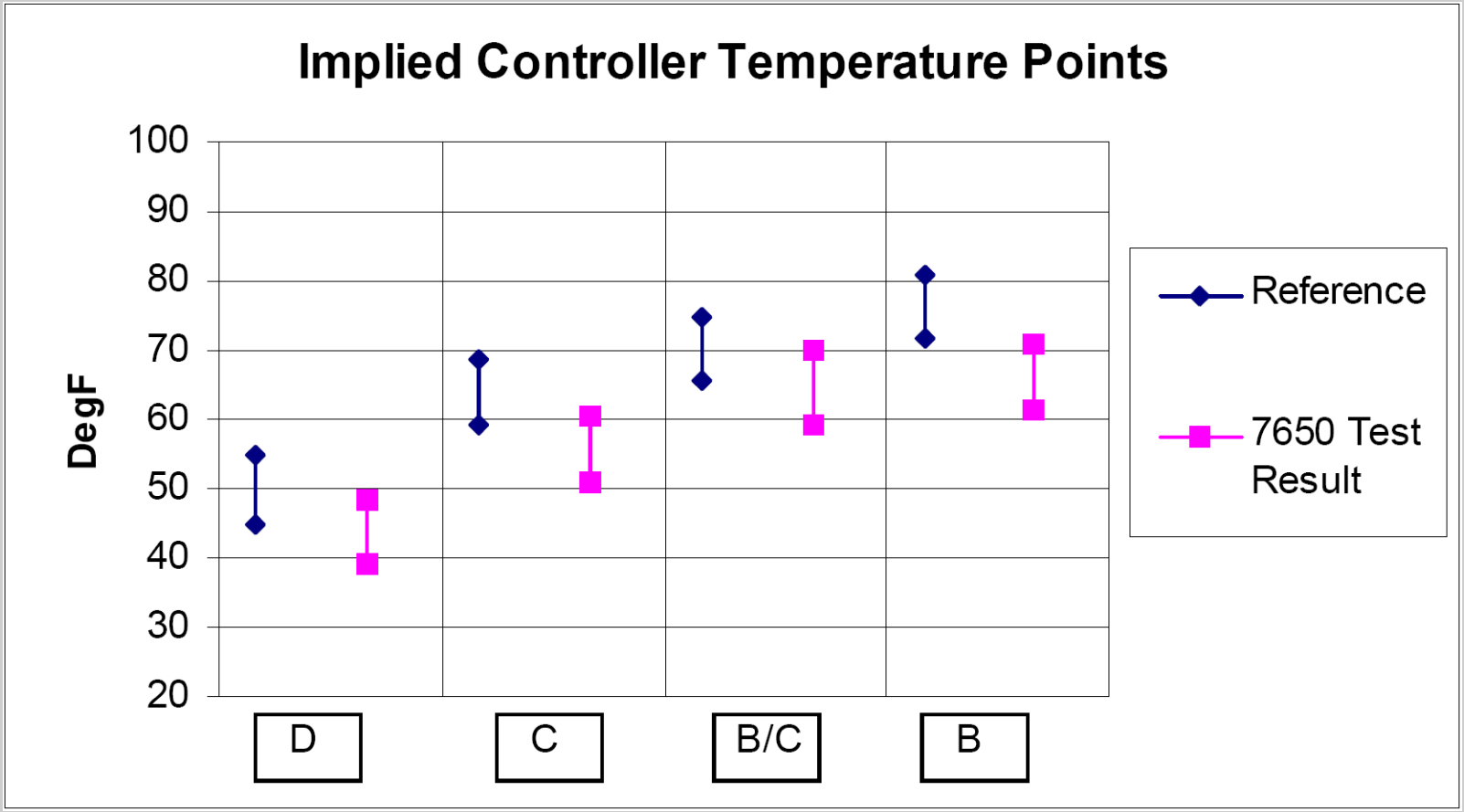

Courtesy: New Buildings Institute

Inconsistent Sensor Operation

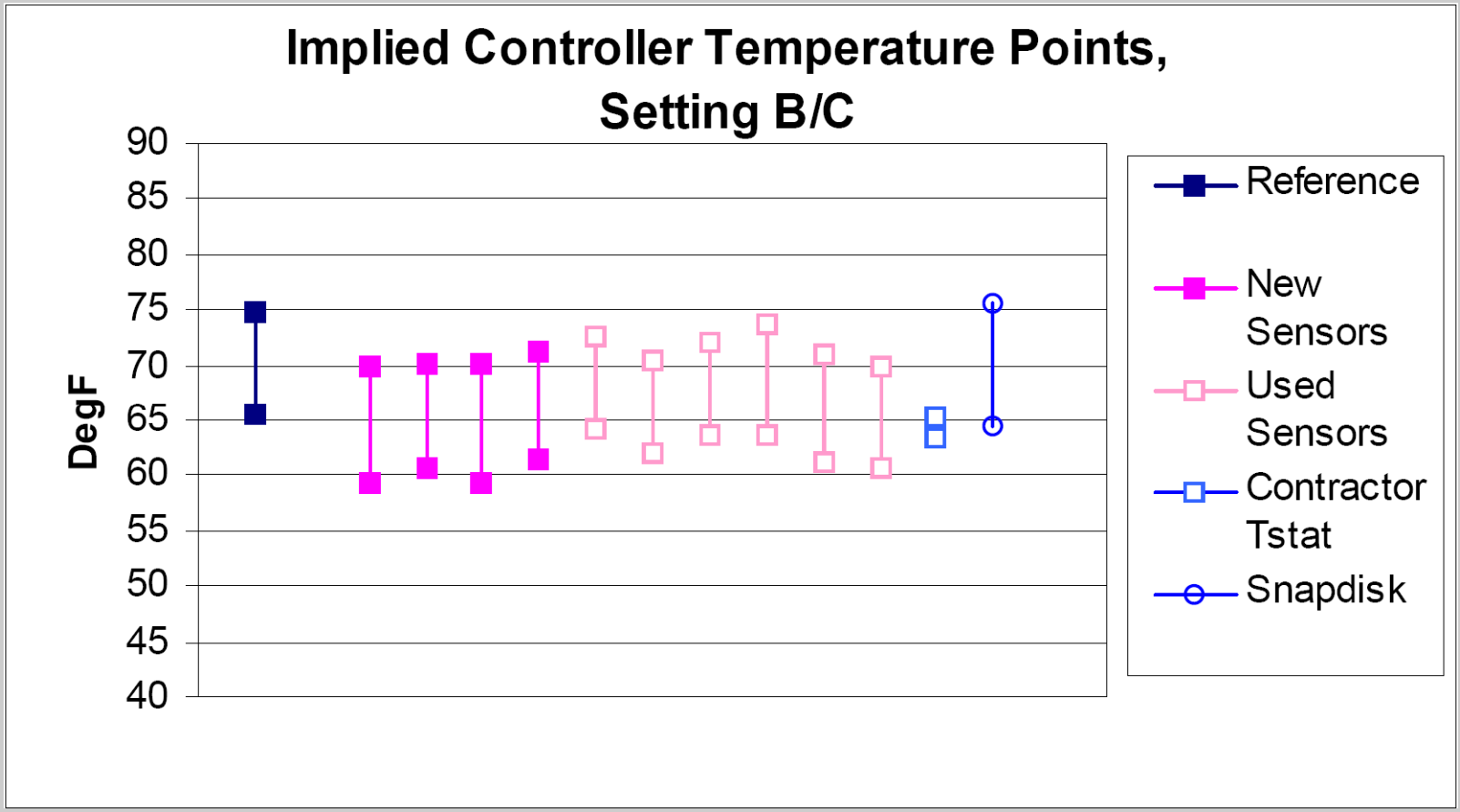

Courtesy: New Buildings Institute

The New Model

Image © 2009 Honeywell International Inc.

Acknowledgements

- Reid Hart, now with Portland Energy Conservation Inc., for taking intellectual leadership in this field
- The New Buildings Institute for leading the bench-testing effort
- David Robison of Stellar Processes for leading the bench-testing team

For More Information

- **Jay Stein**
  Executive Vice President
  E SOURCE
  303-345-9131
  jay_stein@esource.com