GovEnergy
www.govenergy.gov

· August 15-18, 2010 · Dallas, Texas ·
· Dallas Convention Center ·

Perfecting O&M Cost Estimating

Jeff Coles, PE

- Schneider Electric – 10 years
- Industry experience – 20+ years
- Federal Performance Contracting Project Development

Operations & Maintenance

- A necessary evil?
- Everyone has to deal with it
  - Homeowners, facilities personnel, automobiles

Operations & Maintenance Estimating; the 4 W's

- **What**
  - Predicting ongoing costs associated with ownership of building systems
- **When**
  - During engineering & design of new facilities or renovation of existing facilities
  - Throughout economic useful life of facility
- **Who**
  - New facility or renovation Project Team
  - Facility Operations & Maintenance Staff
- **Why**
  - Obtain funding to maximize equipment life and enable sustainable performance
  - Minimize total cost of ownership

O&M Estimating Considerations…

- **Nice to have's**
  - Historical data
- **Must have's**
  - O&M scope for each piece or logical grouping of equipment required (i.e. Daily, Monthly, Quarterly, Annually, etc)
  - Basis for distribution between self-performed and contracted O&M scope.
  - Evaluation of potential contracted O&M organizations proximity, capabilities and past performance.
- O&M is an element of Total Cost of Ownership, therefore advisable to evaluate in the context of Lifecycle Cost

Elements of Lifecycle Cost

- Equipment Information
  - Economic useful life
  - Annual Operations, Maintenance, & Repair costs
  - Annual Energy Costs
  - First Costs
  - Replacement costs throughout Life Cycle Cost time period
- Financial Information
  - Term
  - Interest Rate
  - Energy and Operations/Maintenance/Repair escalation rates

Equipment Replacement

- This is the perfect time to make a meaningful case for O&M cost estimating…
  - Make an informed decision based on the results
- Brand, size, features aren't the only factors
- Look at application
- How about an example?

Example:
Chiller Replacement Solution

Example: Chiller Replacement

- Military base in sub-tropical climate
  - Highly corrosive environment
    - Humidity, Salty Air, Typhoon potential
- Hard water conditions prevent water-cooled systems
  - Troublesome maintenance
  - Staff prefer air-cooled
- Air-cooled chillers are replaced every 7-10 years
  - Condensers are destroyed by corrosive elements
- Equipment must be reliable & commercially available

The Three Options

1. Packaged Air-Cooled Chiller (existing)

2. Magnetic Bearing, High Efficiency

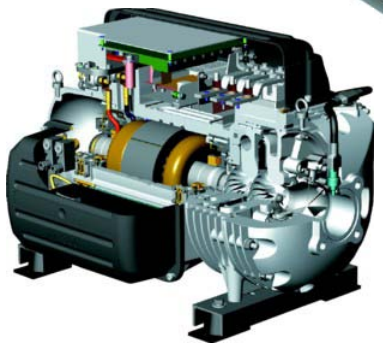

3. Split Evaporator & Condenser

+

Option 1: Air-Cooled

- Pros:
  - Lowest first cost
  - Easily maintained, ~100 already on base
  - Reliable
- Cons:
  - Short lifespan; condenser fins corrode in 7-10 years
  - Entire machine is replaced
  - Inefficient (13.2 avg. installed EER)

Option 2: Magnetic Bearing

- Pros:
  - Very energy efficient (17 EER)
  - Potential agency recognition
  - Improved chilled water temperature control
- Cons:
  - More expensive
  - Same 7-10 year lifespan
  - Specialized equipment, electronics
  - Nearest support office is 4,000 miles away

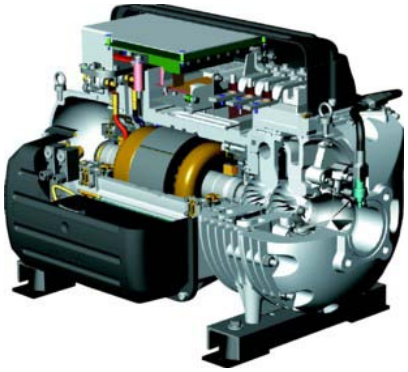

Option 3: Split Evaporator & Condenser

- Pros:
  - Lower replacement costs
  - Moves major components of chiller inside, away from corrosive elements
    - Compressor/evaporator are saved
  - Condenser can be replaced at 7-10 years
- Cons:
  - Lowest efficiency (13.0 EER)

+

20 Year Lifecycle Costs

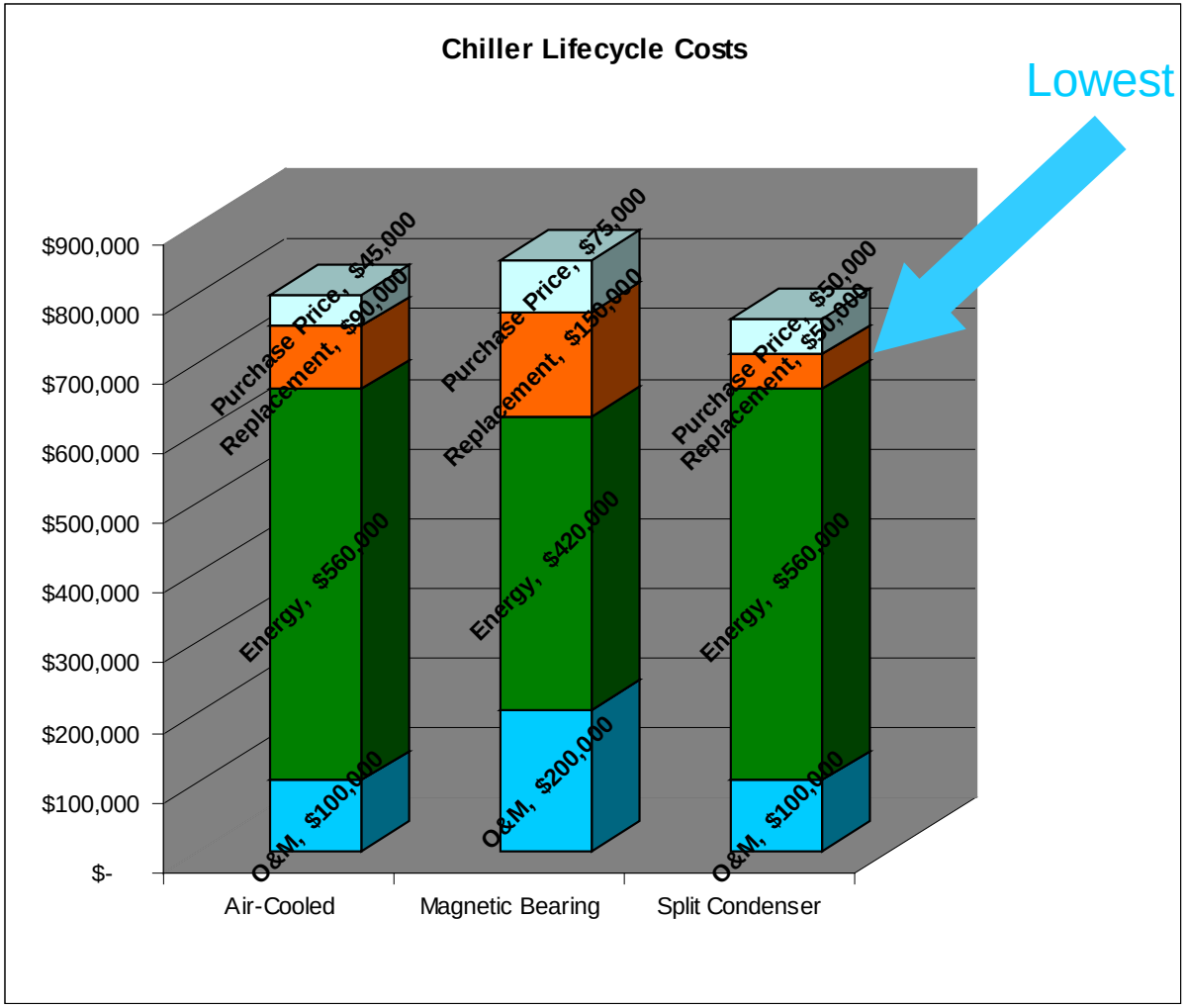

Repair & Replacement

R&R Costs

Air Cooled

Year 0 | Year 8 | Year 16 | Year 20

Replace Chiller $45,000

Replace Chiller $45,000

$90,000

Magnetic Bearing

Replace Chiller $100,000

Replace Chiller $100,000

$200,000

Split Condenser

Replace Condenser $25,000

Replace Condenser $25,000

$50,000

Financial Impact

	Purchase Price (100 ton)	Annual O&M Costs	Annual Energy Costs	R&R Costs every 8 years	**Lifecycle Cost (20 Years)**
Option 1: Packaged Air Cooled	$45,000	$5,000	$28,000	$45,000	**$795,000**
Option 2: Magnetic Bearing	$75,000	$100,000	$22,000	$75,000	**$845,000**
Option 3: Split Condenser	$50,000	$5,000	$28,000	$25,000	**$760,000**

Choice?

- Option 3: Split Evaporator & Condenser
- Why?
  - Packaged air-cooled machines are currently replaced every 7.8 yrs (on average)
  - Packaged magnetic bearing chiller is costly
    - Would also have to be replaced after 7-10 years
  - Long term choice is option 3
    - Despite energy savings, of option 2

Additional considerations

- Analysis is prediction based on what is known today.
- Analysis only as good as the data.
- Consider utilizing total cost of ownership as bid criteria for equipment.
- You must frame O&M cost estimating in the context of Lifecycle Cost

Questions?