GovEnergy
www.govenergy.gov

· August 15-18, 2010 · Dallas, Texas ·
· Dallas Convention Center ·

VFD Considerations: Power Quality Versus Cost of Ownership

The Problem

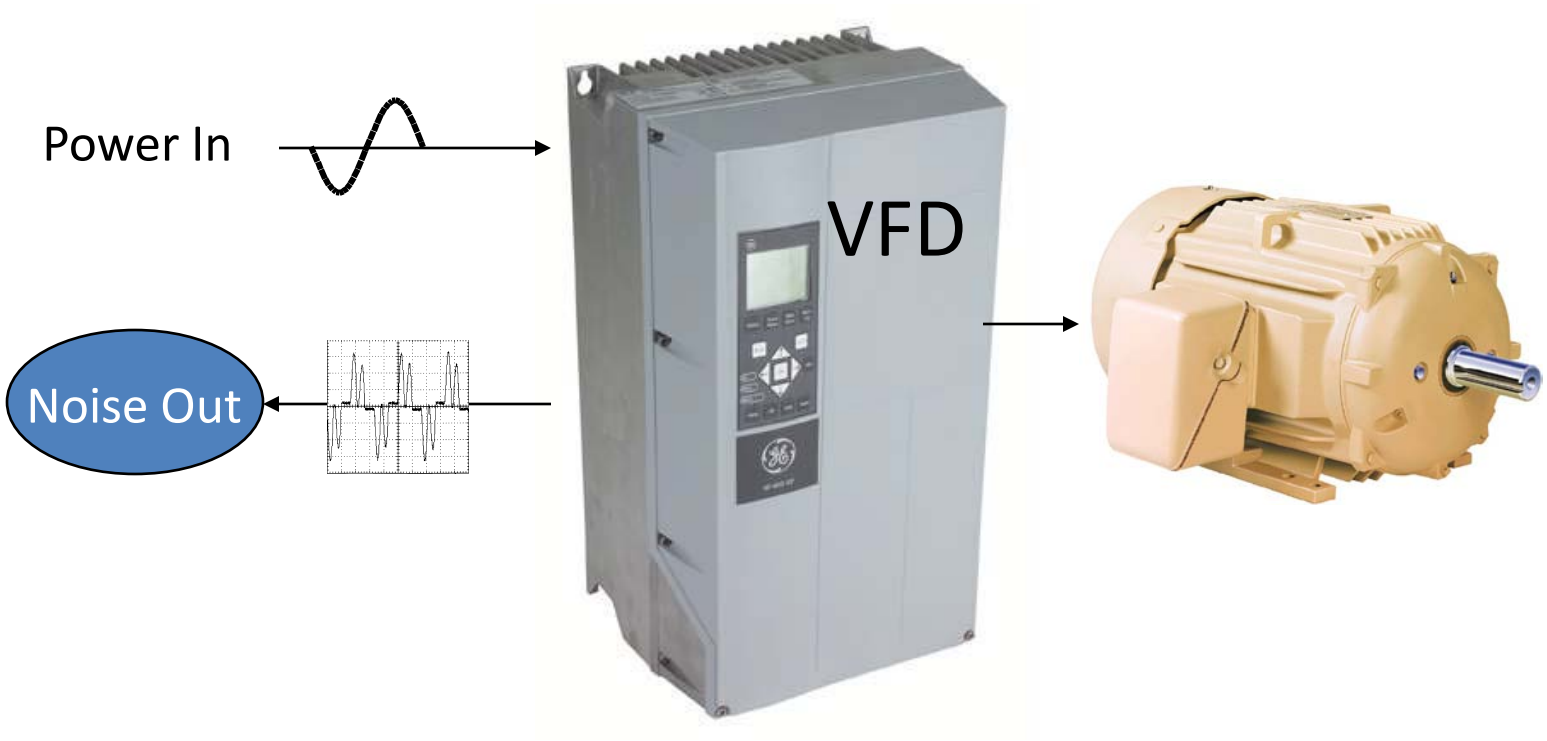

What are Harmonics ?

•Harmonic - A sinusoidal component of a periodic wave or quantity having a frequency that is a integral multiple of the fundamental frequency.

•Characteristic Harmonics - Those harmonics produced by semiconductor converter equipment in the course of normal operation. In a six pulse converter, the characteristic harmonics are the non-triple odd harmonics, for example, the 5th, 7th, 11th, 13th, etc.

IEEE 519-1992 Definitions

More about Harmonics

- Even harmonics (2nd, 4th …) are in phase with the fundamental, cancel each other and are not a concern to most installations although even harmonics do add to the a minor amount to total line currents.

- Odd harmonics (3rd, 5th …) are out of phase with the fundamental, add to fundamental current and are a major concern to most installations and do add a significant amount to the total line currents. Odd harmonics contribute greatly to the non-sinusoidal current waveform with non-linear loads such as AC drives.

How are harmonics generated ?

- In discontinuous conduction situations non-linear loads contribute an infinite number of odd and even harmonic currents.
- Harmonic currents are multiples of the fundamental frequency (60Hz) that are greater than the fundamental frequency.

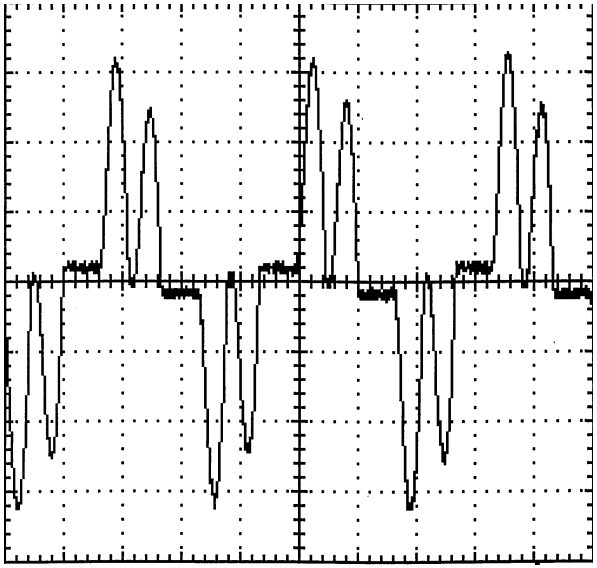

VFD Input Current Without Filter

- Variable Frequency Drives are non-linear loads which generate Harmonic Currents
- Impedance X Harmonic Currents determine Voltage Distortion
- IEEE 519 1992 recommends the current distortion limits to limit voltage distortion levels at the point of common coupling – Typically 5 - 20%

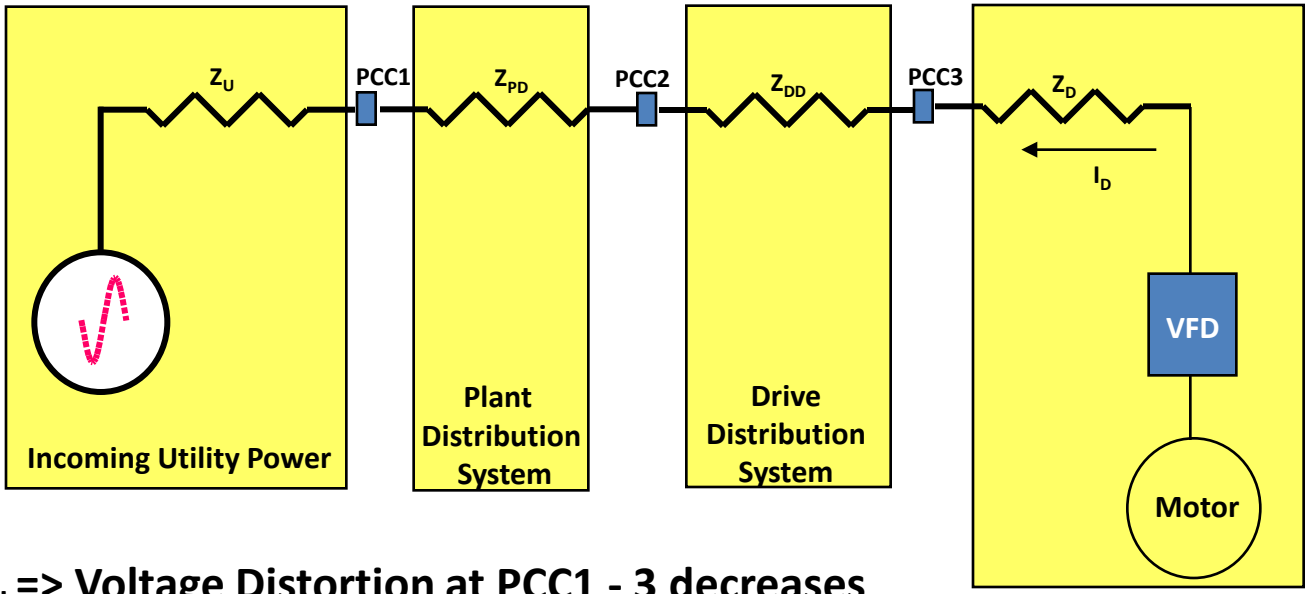

- Decrease Z_U => Voltage Distortion at PCC1 - 3 decreases
  <u>Stiff power systems can handle more drive HP without voltage distortion</u>
- Increase Z_D => Voltage Distortion at PCC1 - 3 decreases by lowering I_D
  <u>Adding line reactance can lower voltage distortion throughout the power distribution system</u>

Problems Harmonics Could Cause

- Elevated RMS current
- Circuit Breaker Trips
- Nuisance Fuse Blowing
- Reduced Equipment Life

  Transformers, Conductors, Breakers, Switches
- Equipment Malfunctions
- High Frequency Currents
- Reduces Effective Power Factor

The Standard: IEEE 519-1992

- It is a power conditioning recommendation, that defines limits to levels of voltage and current harmonic distortion that exist in a system.
- It's basis is in the need for clean voltage in facilities that utilize electrical energy.
- Original document placed the burden of control on power-providers
- The 1992 revision shifted at least one-half of the burden to the user.
- The user typically shifts the burden onto user's product providers

IEEE 519-1992 Definitions

- I_{SC} = Short circuit current (utility supply capability)
- I_L = Maximum demand load current
- PCC = Point of Common Coupling (Point where harmonic measurements are made - between the linear and non-linear loads)
- TDD = Total Demand Distortion (Magnitude of harmonic distortion as a percent of maximum demand Current)
- THD = Total Harmonic Distortion (Instantaneous value of harmonic distortion)

IEEE 519-1992 Guidelines

I_{SC}/I_L	< 11	11 ≤ h < 17	17 ≤ h < 23	23 ≤ h < 35	35 ≤ h	TDD
< 20	4.0	2.0	1.5	0.6	0.3	5.0
20 < 50	7.0	3.5	2.5	1.0	0.5	8.0
50 < 100	10.0	4.5	4.0	1.5	0.7	12.0
100 < 1000	12.0	5.5	5.0	2.0	1.0	15.0
> 1000	15.0	7.0	6.0	2.5	1.4	20.0

Solutions

Line Reactor Solution

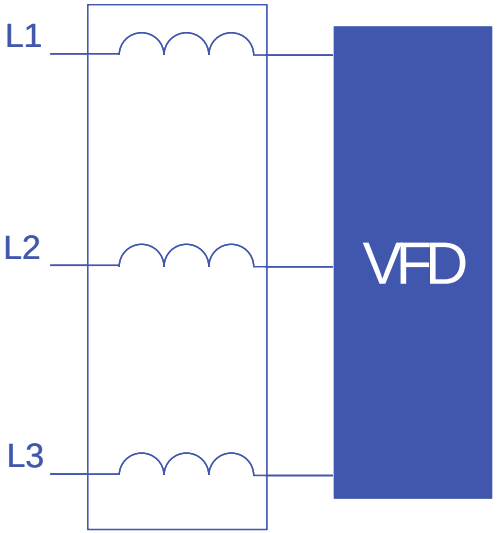

Lowers harmonic current by attenuation

More reactance means more attenuation

Secondary effects include reduced sensitivity to incoming line transients

Line Reactor Solution

Use of Line Reactors to Reduce Current Distortion

Phase A Line current
Without Line Reactor
100% Current Distortion

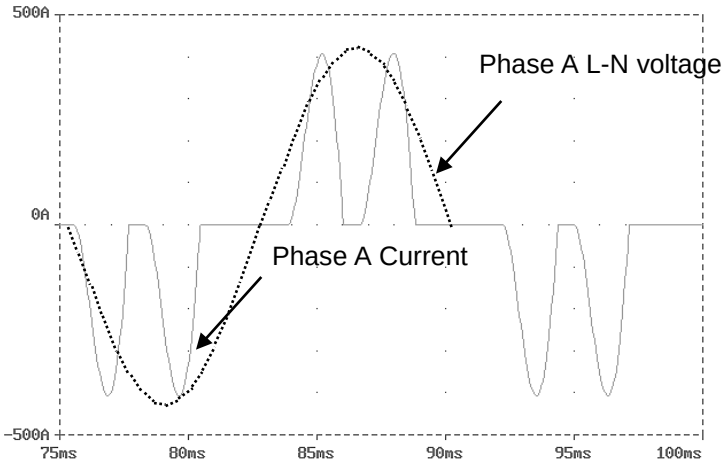

Phase A Line current
With Line Reactor
35% Current distortion

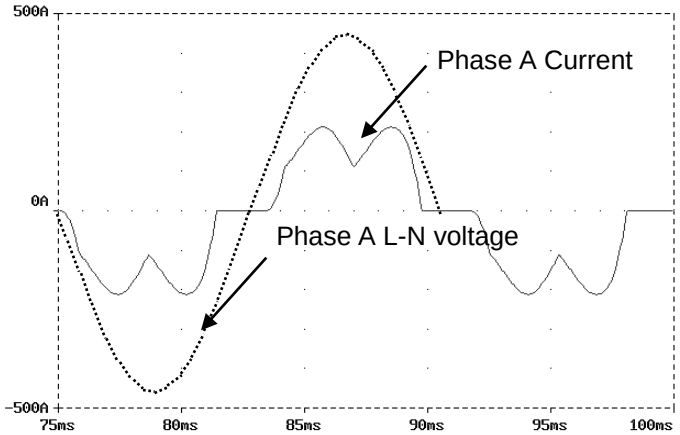

GovEnergy
www.govenergy.gov

Line Reactor Solution

Line Reactors – How Much Distortion is Reduced

Reactor Impedance

Harmonic	**3%**	**4%**	**5%**	**6%**	**7%**	**8%**	**9%**	**10%**
5th	40	34	32	30	28	26	24	23
7th	16	13	12	11	10	9	8.3	7.5
11th	7.3	6.3	5.8	5.2	5	4.3	4.2	4
13th	4.9	4.2	3.9	3.6	3.3	3.15	3	2.8
17th	3	2.4	2.2	2.1	0.9	0.7	0.5	0.4
19th	2.2	2	0.8	0.7	0.4	0.3	0.25	0.2
%THID	**44.13**	**37.31**	**34.96**	**32.65**	**30.35**	**28.04**	**25.92**	**24.68**

Line Reactor Solution

Rated in KVA and % Impedance

Advantages:

Discontinuous currents in the drive can become continuous - Lowering voltage distortion

Can reduce transient over-voltages to the drive - Increasing drive up-time

Can lower inrush capacitor charging current in the drive - Increasing drive up-time

Disadvantages

Reactor impedance lowers available incoming AC volts to the drive - Potential drive voltage output derating

The reactor has electrical losses - Decreases drive efficiency

Active Filter Solution

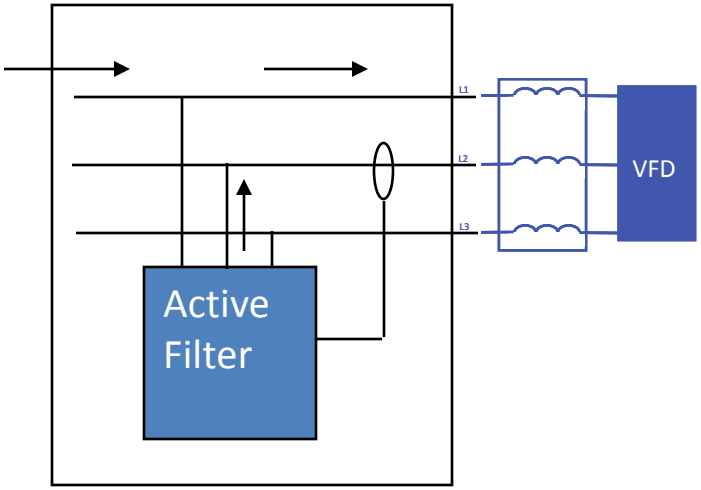

Lowers harmonic current by injection of out of phase harmonic current

Can be used to cancel harmonics of multiple drives on same source

Active Filter Solution

Advantages:

- Can limit THID to 12, 8, or 5% on new and existing systems
- Can provide power factor correction
- A single unit can take care of multiple drives

Disadvantages

- Losses are high
- Increases drive footprint
- Complicated

Low Pass Harmonic Filter Solution

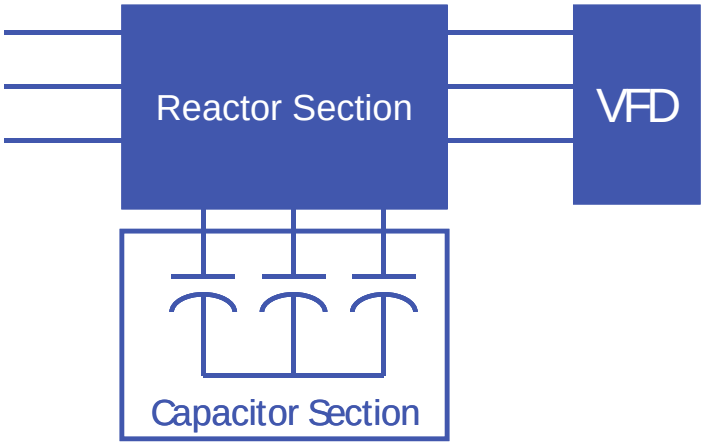

Lowers harmonic current by filtering

Selection of the reactor and capacitor section will determine filtering capability

Well designed filters will not oscillate (resonate) with the facility power system

Low Pass Harmonic Filter Solution

Advantages:

- Can limit THID to 12, 8, or 5% on new and existing systems
- Can provide some power factor correction when the drive is off

Disadvantages

- Bypass configurations complicated
- Increases drive footprint

12/18/24 Pulse Drive Solution

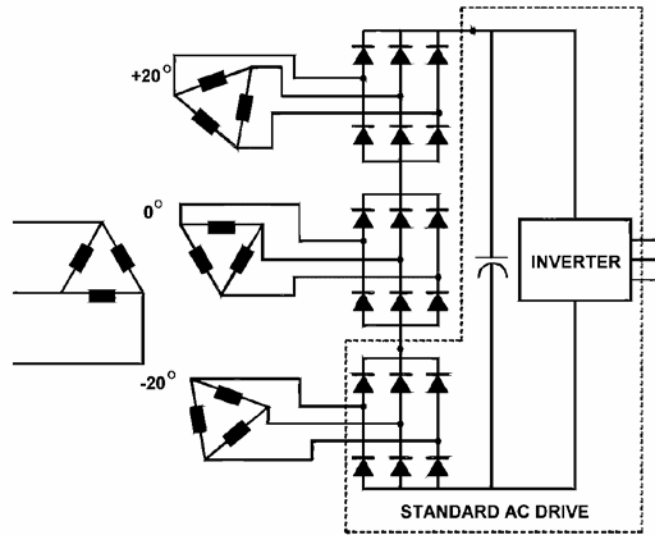

Magnetically cancels harmonics

More “pulses” means more cancellation

Requires additional power components

Requires an additional transformer

May required additional incoming line reactor

12/18/24 Pulse Drive Solution

Use of 12 and 18 Pulse Diode Converters to Lower Current Distortion

6 Pulse has ~ 40% total harmonic distortion best case

- Simplest configuration
- Smallest footprint
- Least cost

12 pulse has ~ 7.5% distortion best case

- Double components of 6 pulse bridge converter
- Larger footprint – requires phase shifting transformer
- More cost $

18 pulse has ~ 4% distortion best case

- Triple components of 6 pulse bridge converter
- Largest footprint
- More cost $$
- Meets IEEE 519 1992 at the drive terminals without a filter for balanced 3 phase systems

GovEnergy
www.govenergy.gov

12/18/24 Pulse Drive Solution

Advantages:

- Can be applied independent of the Point of Common Coupling

Disadvantages:

- Sensitive to voltage unbalance
- Higher losses due to transformer/reactor
- Bigger footprint

Cost of Power Quality Solutions

Drive Type	40HP	100HP	300HP
6 Pulse VFD with Link Reactor	100%	100%	100%
5% Line Reactor	113%	112%	113%
18 Pulse Front End	233%	173%	134%
Low Pass Filter	152%	148%	144%
PWM Injection	486%	303%	227%

GovEnergy
www.govenergy.gov

Losses of Power Quality Solutions

Drive Type	40HP	100HP	300HP
6 Pulse VFD with Link Reactor	698 Watts	1,384 Watts	5,119 Watts
5% Line Reactor	750 Watts	1,492 Watts	5,338 Watts
18 Pulse Front End	1,949 Watts	3,602 Watts	10,017 Watts
Low Pass Filter	1,170 Watts	2,228 Watts	6,612 Watts
PWM Injection	2,550 Watts	3,292 Watts	8,338 Watts

GovEnergy
www.govenergy.gov

Reliability of Power Quality Solutions

Drive Type	Components	Complicated	Connection Points	Overall Score
6 Pulse VFD with Link Reactor	+++	+++	+++	1
5% Line Reactor	++	+++	++	2
18 Pulse Front End	-	+	-	4
Low Pass Filter	+	+	+	3
PWM Injection	--	--	--	5

GovEnergy
www.govenergy.gov

GovEnergy 2010

Summary

- Power quality is important, but comes at a cost
- Interpret the standard correctly
- Consider complete cost of ownership to determine the optimal solution