GovEnergy
www.govenergy.gov

· August 15-18, 2010 · Dallas, Texas ·
· Dallas Convention Center ·

Mike Hightower and Abbas Akhil
Sandia National Laboratories
Albuquerque, NM
mmhight@sandia.gov
(505) 844-5499

Energy Risk Analysis and Metrics for Enhancing Critical Mission Assurance

Common Installation Electric Power Security and Reliability Issues

- Current practice of providing power security often relies on back-up generators
  - *Frequently over-sized and under-maintained*
  - *Low probability of start when needed (<60%)*
  - *Dedicated to one building or facility – does not share power with other facilities*
  - *Operations for extended periods often problematic*
- Supply redundancy within the transmission system is often ineffective for several reasons
- Stating 9's of reliability – does not factor in the erosion of critical mission capability
- Current safety requirements force many renewable energy technologies to go offline during a power outage

Observed Energy Issues that Threaten Mission Critical Operations

- Substations commonly outside of base fence
  - Often common point of failure for all feeders
- Lack of critical mission understanding and associated energy and duration requirements
  - Multiple groups with different perspectives - base commander, tenant commanders, utility managers
  - Often Mmultiple MEVA and critical energy asset lists
- Often radial distribution feeder designs
  - Could be used to provide redundancy but are often not interconnected
- Power outages occurring as many as 300 times per year
  - Low maintenance of back up generation, low probability of start when needed (60%), limited operational capability for extended periods

Example of Common Energy System Configuration Concerns

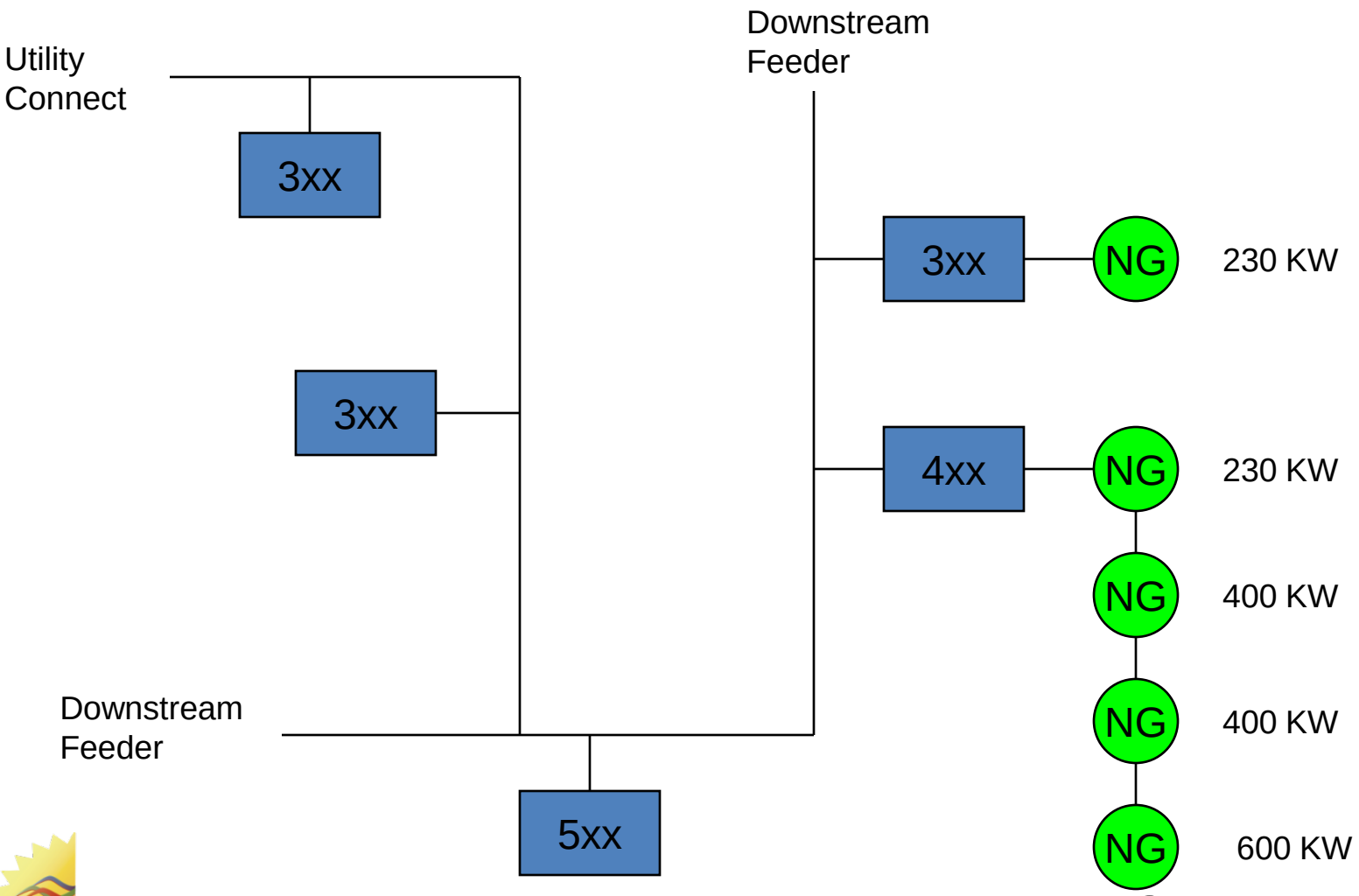

GovEnergy 2010

The 2010 QDR Provides Guidance on Energy Security and Energy Assurance

- Defines Energy Security

  "Energy security for the Department means having assured access to reliable supplies of energy and the ability to protect and deliver sufficient energy to meet operational needs"

- Definition implies "Energy Security = Energy Assurance or Energy Surety"
  - Guaranteed performance of energy system to meet operational obligations
- Major energy assurance characteristics based on this definition are:
  - System-level Energy Safety, Security, Reliability, Sustainability, and Cost-effectiveness

GovEnergy
www.govenergy.gov

GovEnergy 2010

Energy Assurance Performance Parameters and Definitions

Performance Parameters	Definition
Safety	Safely supply energy to end user
Security	Ability to maintain control over required energy resources
Reliability	Ability to provide and maintain power quality and quantity when and where needed
Sustainability	Ability to maintain power for duration of critical mission or expanded emergency operational functions
Cost Effective	Ability to maintain energy infrastructure and produce energy at an affordable system-level cost

Metric Quantification is Site and Mission Specific

The 2010 QDR Provides Direction on Energy Security Assessments

- Directs facilities to:
  - Address energy security while simultaneously enhancing mission assurance
  - Conduct a coordinated energy assessment to prioritize critical assets
  - Promote investments in energy efficiency
  - Ensure that critical assets are prepared for prolonged outages: natural disasters, accidents, attacks
- Use of microgrids and risk-based energy assurance evaluation can be used to meet 2010 QDR directives for energy assurance

Microgrids Can Increase Energy Surety

With distributed generation and storage, electric power can be provided when the grid is down

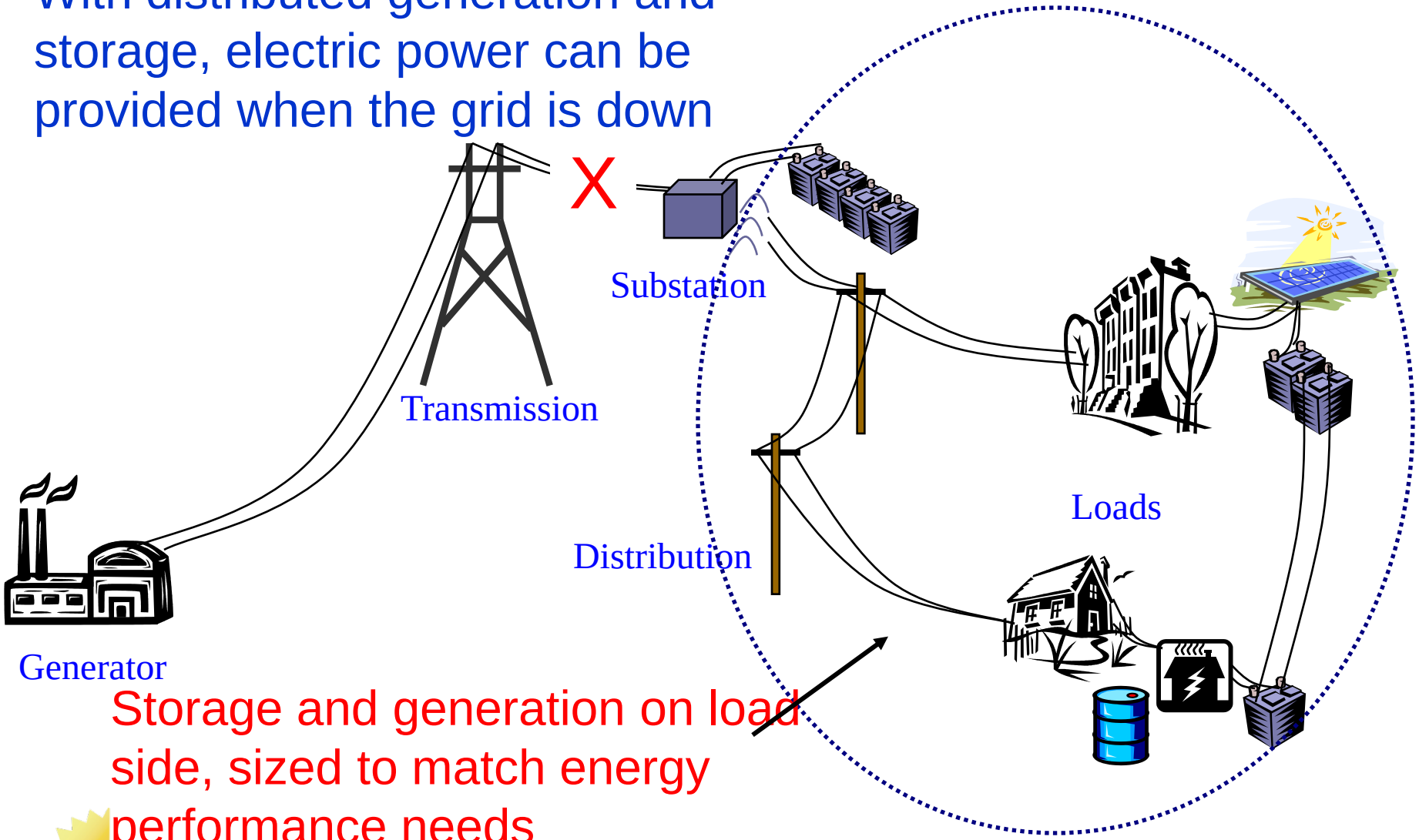

Storage and generation on load side, sized to match energy <u>performance</u> needs

GovEnergy 2010

Risk-based Assessment Approach for Energy Assurance

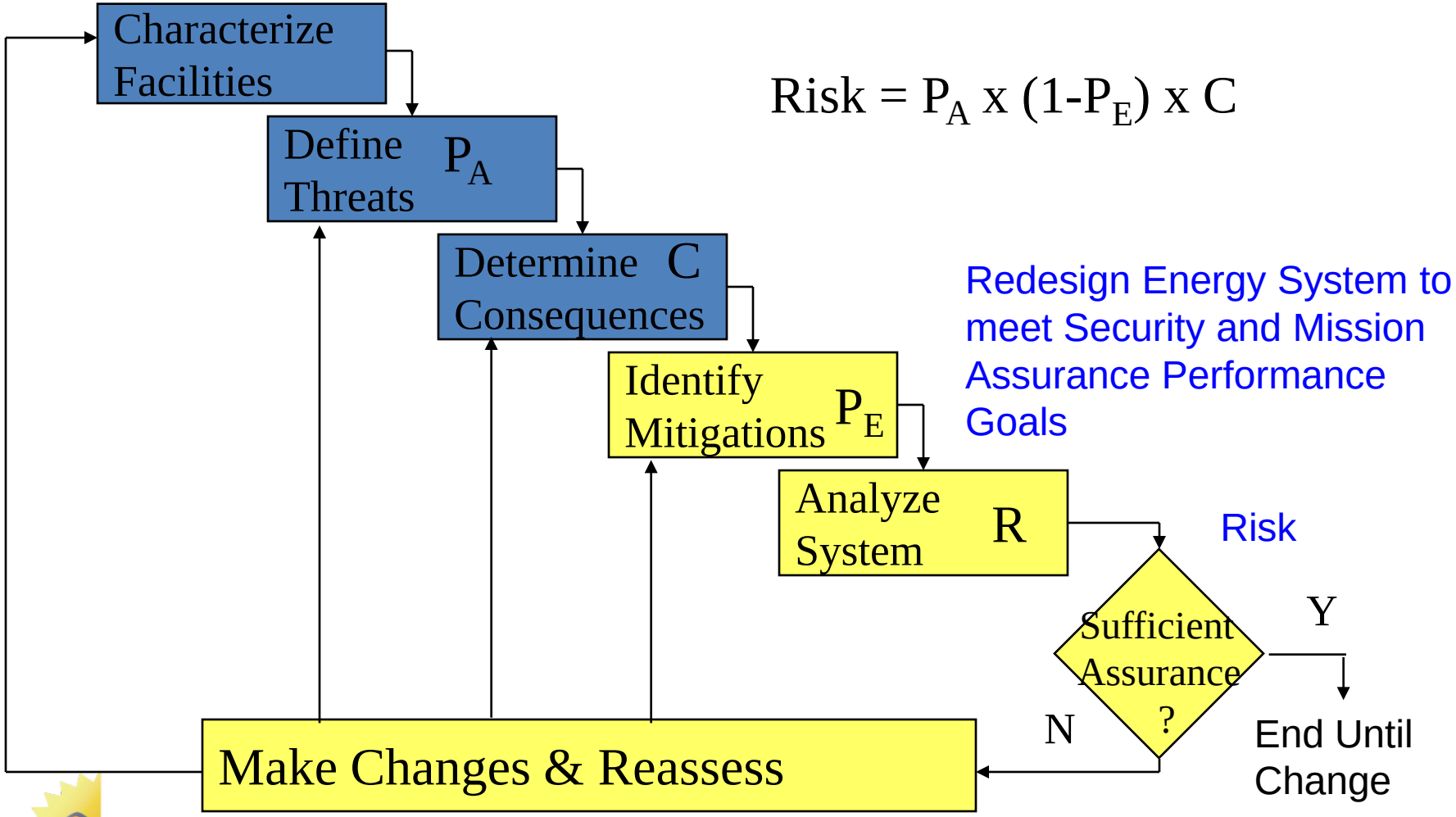

$$\text{Risk} = P_A \times (1-P_E) \times C$$

GovEnergy 2010

Metric Quantification

- Safety
  - Energy system ability to operate “grid tied” and “islanded”
  - Include architectural designs that support bi-directional power flow
  - Add controls and switchgear that ensure energy system can be safely maintained with bi-directional power flow
- Reliability
  - Generation, storage, and distribution system <u>designed and maintained</u> to meet <u>critical mission</u> power <u>quantity and quality</u> performance needs
    - Looping of feeders as appropriate, move gen sets away from being building dedicated, use power flow modeling for asset selection and positioning
  - Distributed generation requirement of ~15-25% of base load
  - Shed non-critical loads as needed

Metric Quantification

- Security
  - Power generation and storage on distribution and load side with improved physical and cyber control and protection
- Sustainability
  - Varies by missions and operations but often ~ 2-7 days, with some considerations of 10-14 day outages
  - Durations need to include weather, accidental, intentional, and natural disaster considerations
- Cost effective
  - Utilize existing assets where possible
  - Risk-based analysis to quantify cost/benefits of energy security and reliability for ROI analyses
  - Integrate DG and renewables with CHP to increase energy efficiency

Current Sandia Military Microgrid Conceptual Design Efforts

- Army
  - Ft Sill, Ft. Bliss, Ft. Belvoir, Ft. D
  - Considering additional sites an
- Navy/Marines
  - Indian Head, Camp Smith
  - Other sites about to start
  - PACCOM/NORTHCOM demo fu
- Air Force
  - Maxwell AFB, Kirtland AFB, an
  - Maxwell demo funded

GovEnergy 2010

Energy Surety Microgrid Upgrade Example

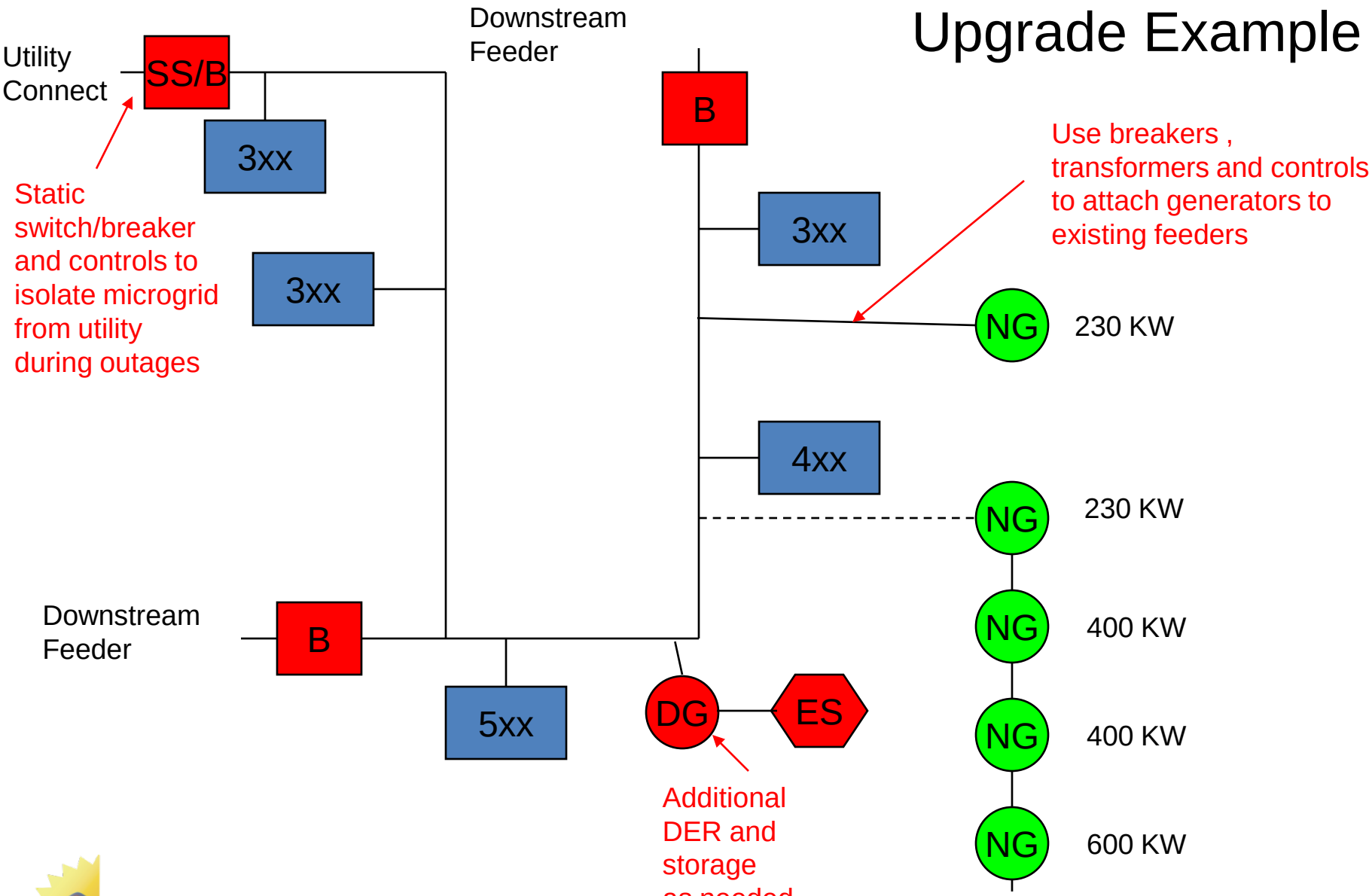

GovEnergy 2010