GovEnergy
www.govenergy.gov

· August 15-18, 2010 · Dallas, Texas ·
· Dallas Convention Center ·

John Kern
GE Global Research

Microgrids and US Military Installations

A Smarter Grid for Military Installations

Through the secure integration of two robust infrastructures

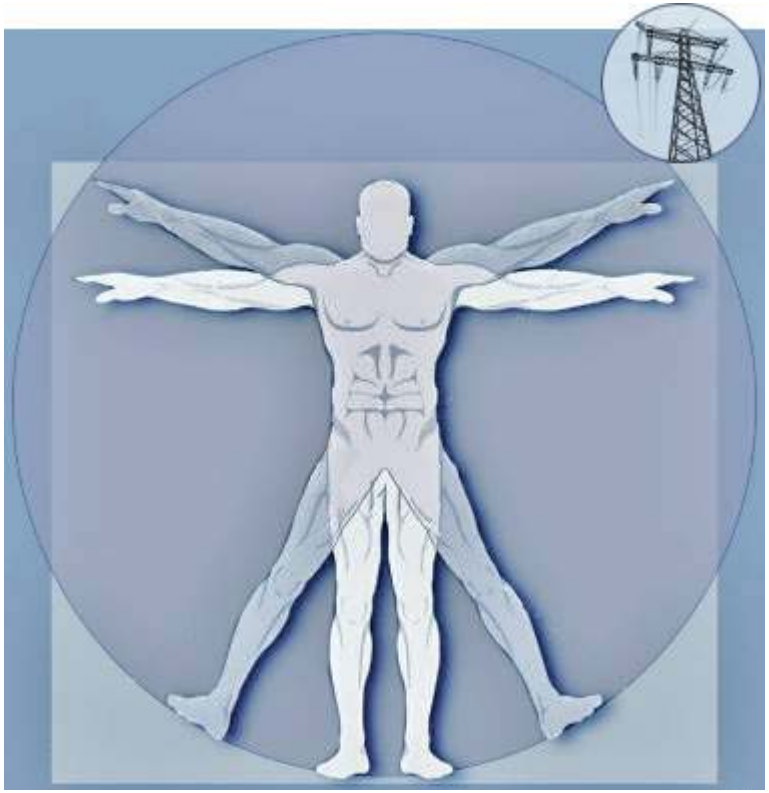

+

Electrical infrastructure

- **Fixed assets . . .** Generators/DERs, transformers, T&D lines
- 100+ year legacy of delivering electrons to consumers

Information infrastructure

- **Communications and IT Data Systems . . .** Fiber, wireless, satellite
- 20 year legacy delivering grid information to operators, customers

GovEnergy
www.govenergy.gov

What is a Microgrid?

A power distribution network that includes **local (distributed) generation** and possibly energy storage, and can operate in an islanded mode (open grid connection)

Local Generation can include conventional (fossil fuel based) and/or renewable generation (PV, Wind, Hydro, Bio-mass)

Energy storage (H2/Fuel cell, Batteries, Pumped Hydro, Flywheel, Compressed Air)

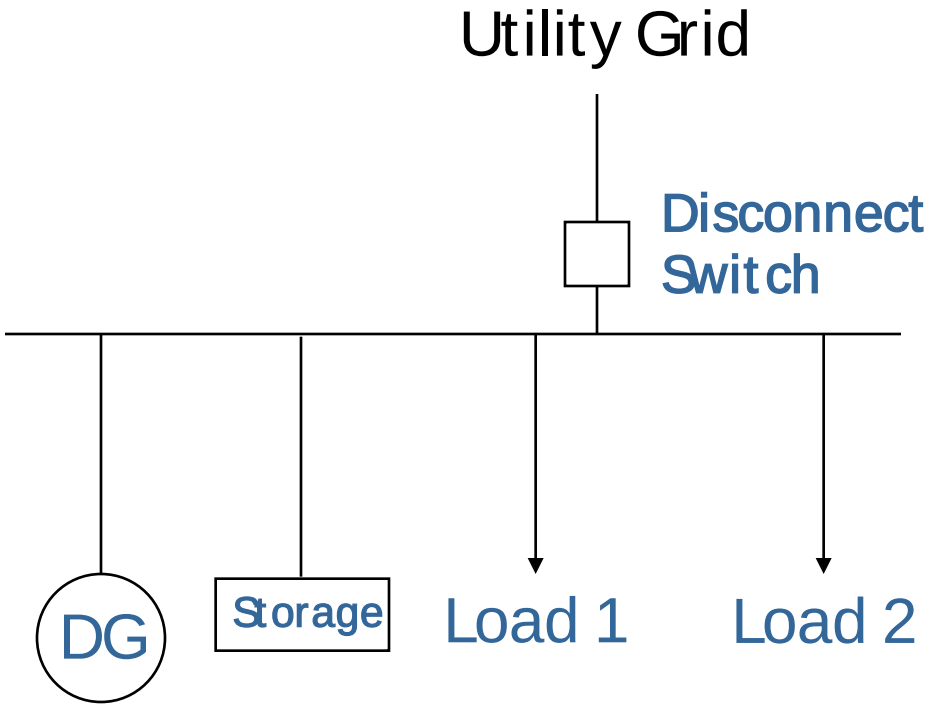

An advanced approach to enable integration of a large quantity of DERs into the electric utility grid as a dispatchable resource

GovEnergy 2010

Microgrid Characteristics

- Combination of conventional and/or renewable on/off the grid energy sources
- Energy storage system to compensate for renewable intermittency
- Communication networking of all Microgrid elements including load clusters
- Integration with Protection Controls to ensure reliable operation

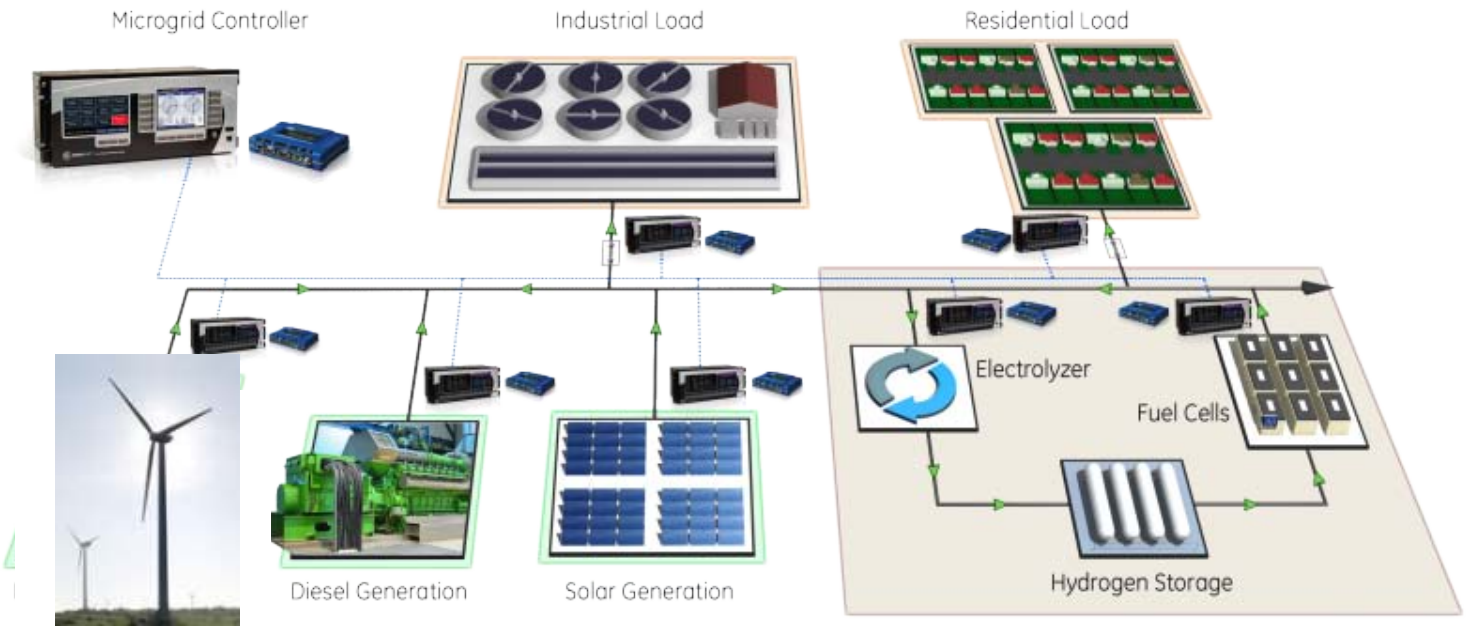

A *smart* control system to optimize and manage generators, energy storage and loads within the microgrid

GovEnergy 2010

Microgrids for Remote Communities

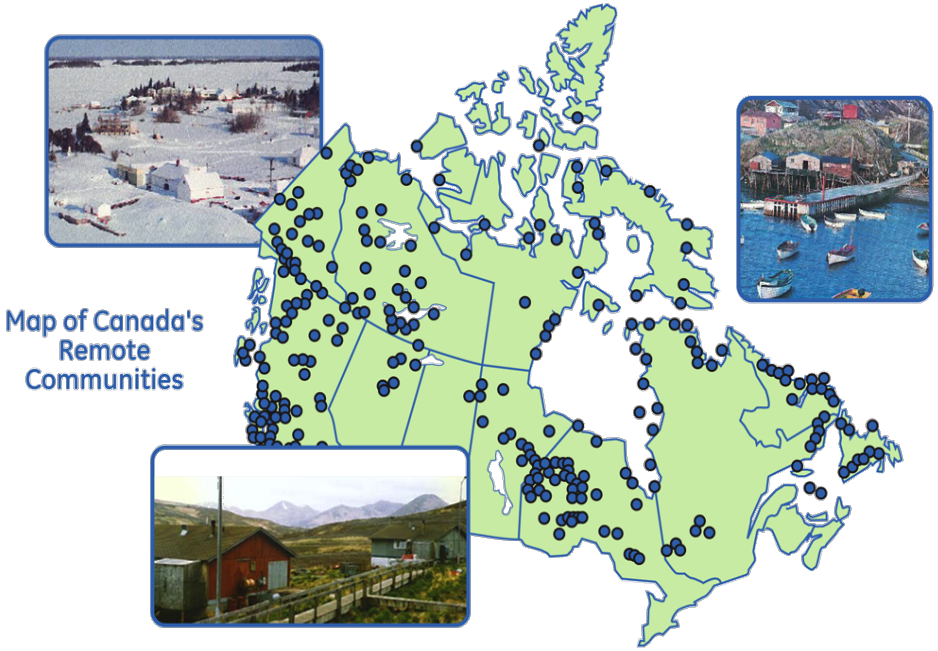

Enable energy independence & emissions reduction for Canada's remote communities …

- Over 300 Canadian communities
- Electrified by diesel engines
- High cost of electricity over $1.50/KW
- Vast renewable energy resources

A Modular, Scalable Control System Applied to a Diverse Set of Microgrid Applications, and Extensible to General Distribution DG Dispatch

GovEnergy
www.govenergy.gov

GovEnergy 2010

Microgrids for Military Installations

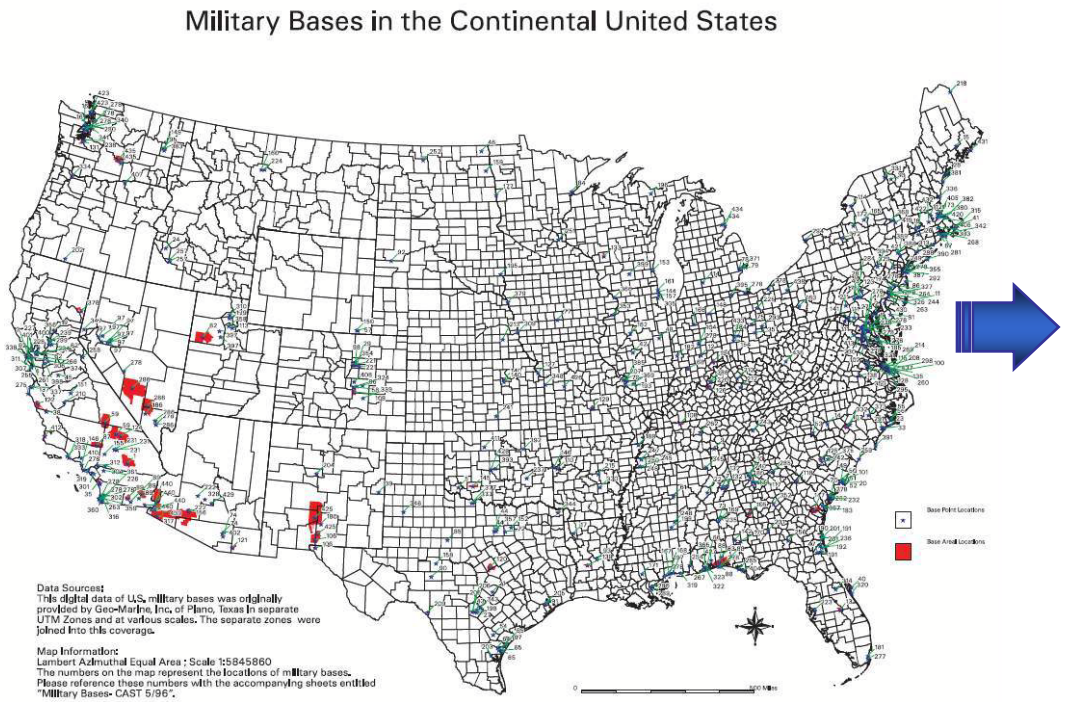

Department of Defense:

- Manages > 577,500 buildings and structures
- Worth $712 billion
- Located on more than 400 installations in US

A Modular, Scalable Control System Applicable to a Diverse Set of Microgrid Applications, and Extensible to General Distribution DG Dispatch

GovEnergy
www.govenergy.gov

Microgrids for Military Installations

Enable energy surety & independence for military installations worldwide

- Reduce reliance on local grids
- Increase energy surety
- Increase energy independence
- Reduce cost of electricity

A Modular, Scalable Control System Applicable to a Diverse Set of Microgrid Applications, and Extensible to General Distribution DG Dispatch

GovEnergy
www.govenergy.gov

GovEnergy 2010

Microgrid Control System Features

1. Optimal Economic Dispatch
2. Intelligent Load Shedding
3. Tie-Line Control

1. Optimal Economic Dispatch

The process of allocating the required load demand between the available resources such that the cost of operation is minimized.

The optimal dispatch algorithm implements *Model Predictive Control* using:

- **Load** forecasts
- **Renewable** generation forecasts (wind, hydro, solar, bio-mass)
- and **Stored Energy**

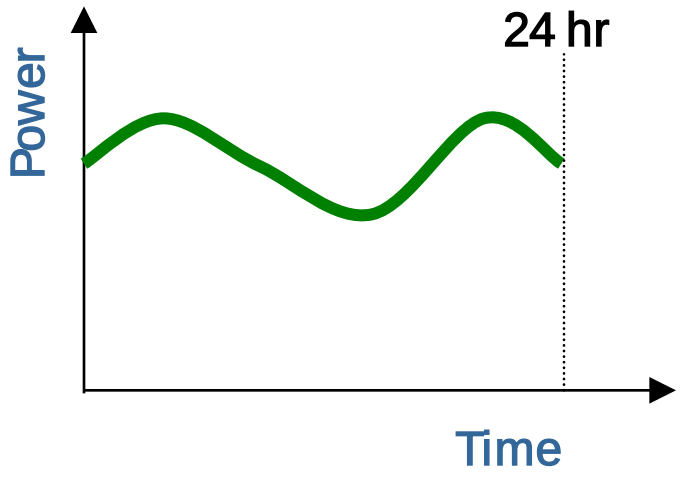

Additional optimization constraints include:

- Unit Commitment, Start/Stop
- Min/max power/thermal output
- Generator Efficiency, Storage Efficiency
- Speed to ramp up/down output
- Electricity–to-thermal ratio in Combined- Heat-Power (CHP) source
- Market price of electricity (if connected to the utility grid) and fuel for DER Assets

GovEnergy 2010

2. Intelligent Load Shedding

An intelligent scheme that will prioritize required amounts of non-critical load to be shed in order to maintain system stability, through:

- Prioritization of loads
- Dynamic load shedding based on potential generation deficit

Load shedding may be triggered by a fast message sent over communications or by a local measurement of frequency

3. Tie Line Control

Distributed Energy Resource Aggregation

To the grid, an aggregated distribution system will appear as a single, well-behaved dispatchable energy resource, with:

- Active and reactive power control
- Power ramp rate limits
- Ancillary services (voltage/VAR regulation, frequency droop..)
- Capability to disconnect and re-synchronize to grid

Example: Windfarm tieline Control

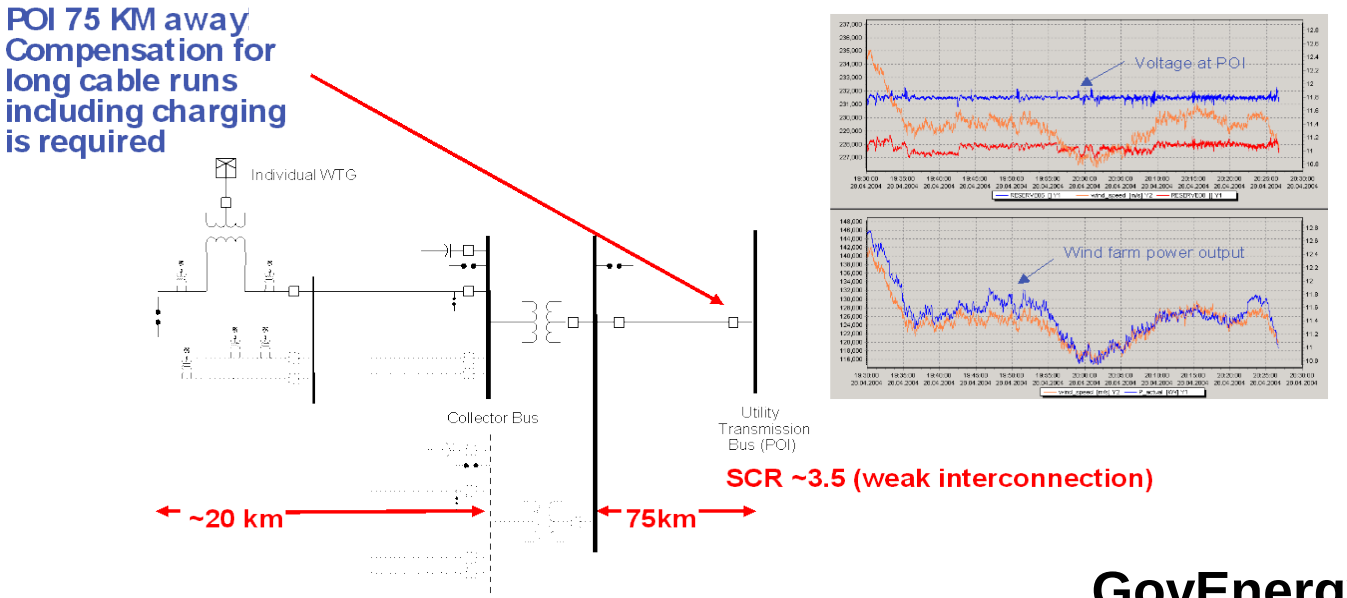

GovEnergy 2010

Bella Coola, Canada

Existing Site:

- 400 km north of Vancouver, off-grid community
- Currently running on diesel gensets and hydro generators at Clayton falls
- Load profile: 4.7/3.2MW, Mostly residential loads
- 2 Hydro generators: 2.12MW
- 8 Diesel Gensets: 6.2MW
- Biggest challenge – Reduction of GHG emissions and cost of diesel transportation

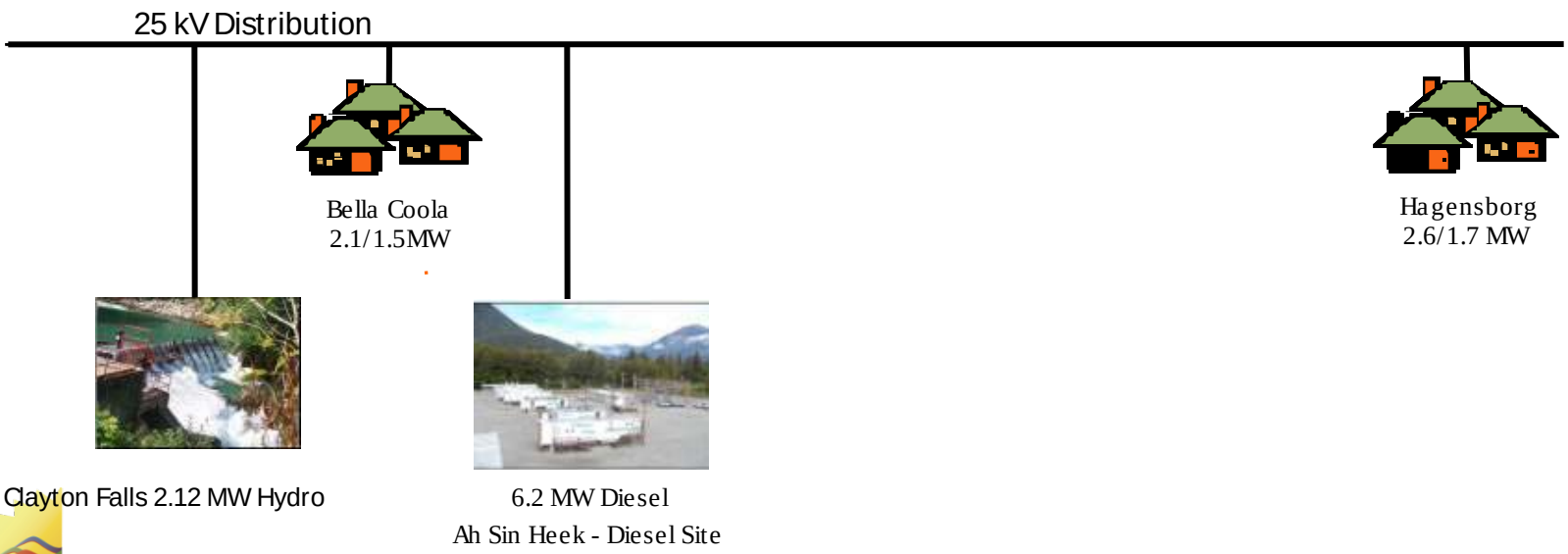

GovEnergy
www.govenergy.gov

GovEnergy 2010

Bella Coola Microgrid

Features:

- Centralized supervisory control to optimize the use of renewables and minimize the use of diesel
- Wireless local area network, interfaces to all Microgrid elements
- Hydrogen based energy storage system
- Capability to connect, monitor and control the system remotely

19% Fuel Cost Benefit Estimate
~2.5 year payback period

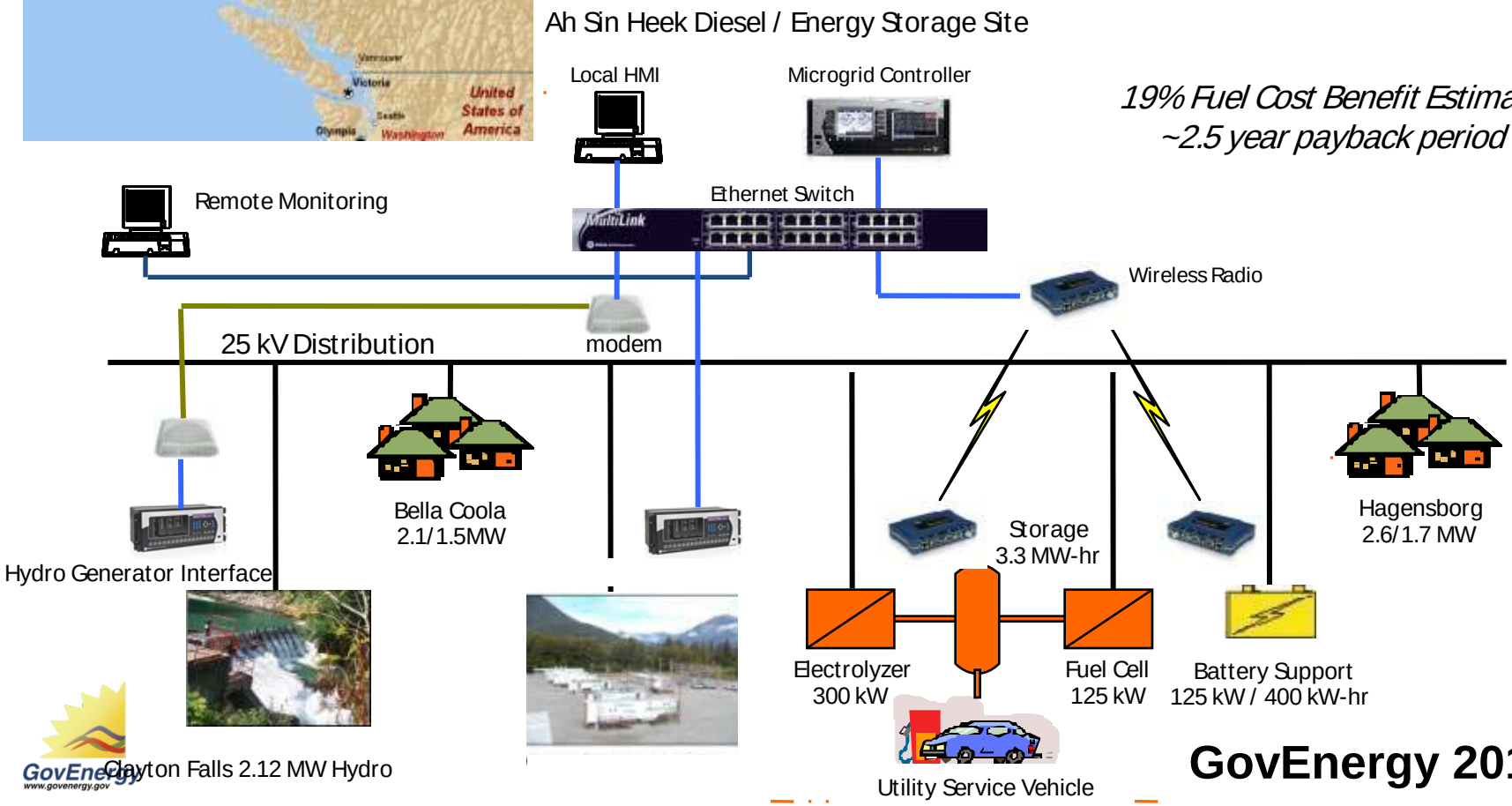

GovEnergy 2010

Twentynine Palms Microgrid

2-year, $2M project design & demonstration

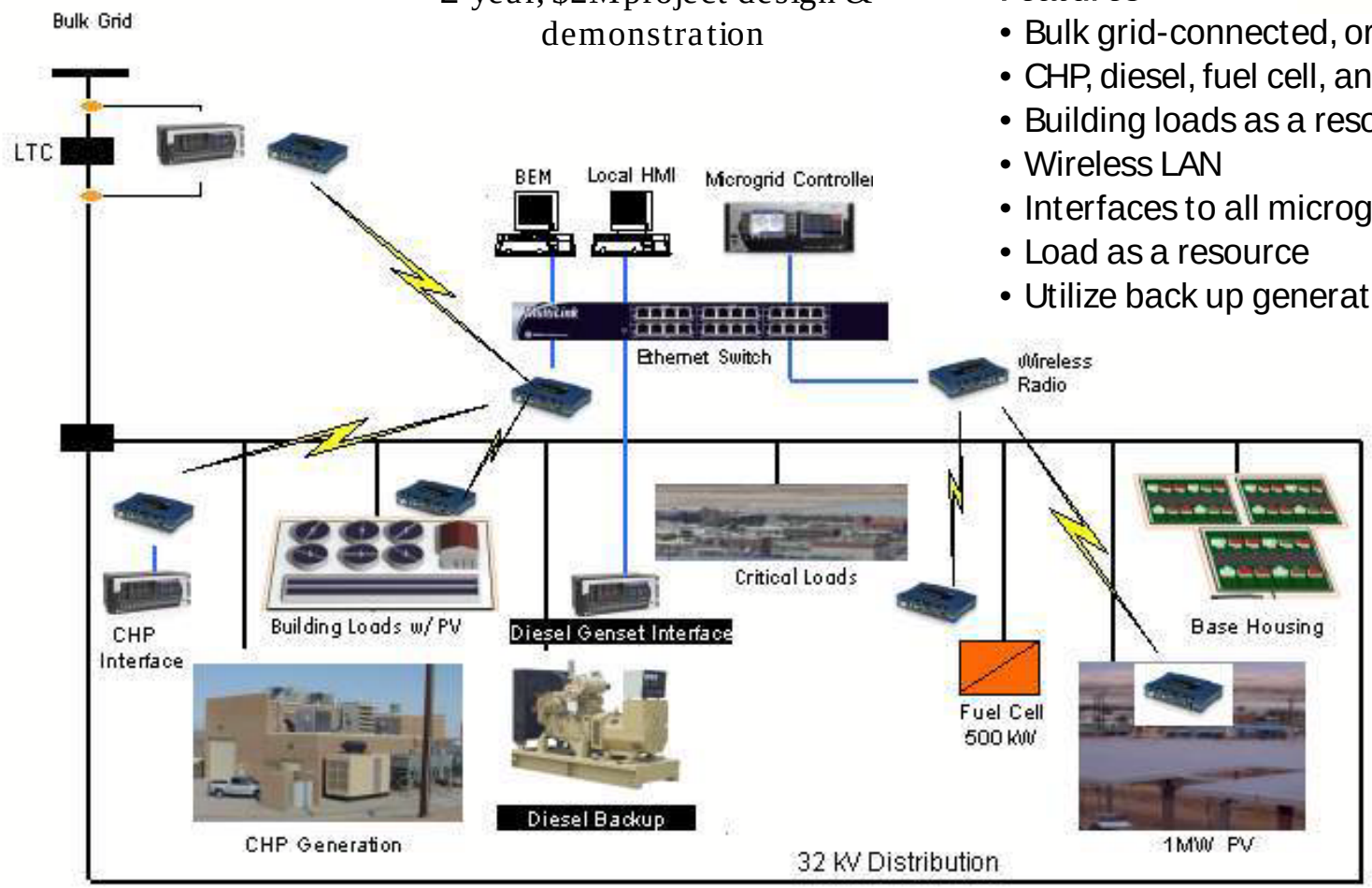

Features

- Bulk grid-connected, or islanded
- CHP, diesel, fuel cell, and PV
- Building loads as a resource via BEM
- Wireless LAN
- Interfaces to all microgrid elements
- Load as a resource
- Utilize back up generator sets

Environmental Security Technology Certification Program: Microgrid Demonstration at Twentynine Palms

Typical Power Profiles

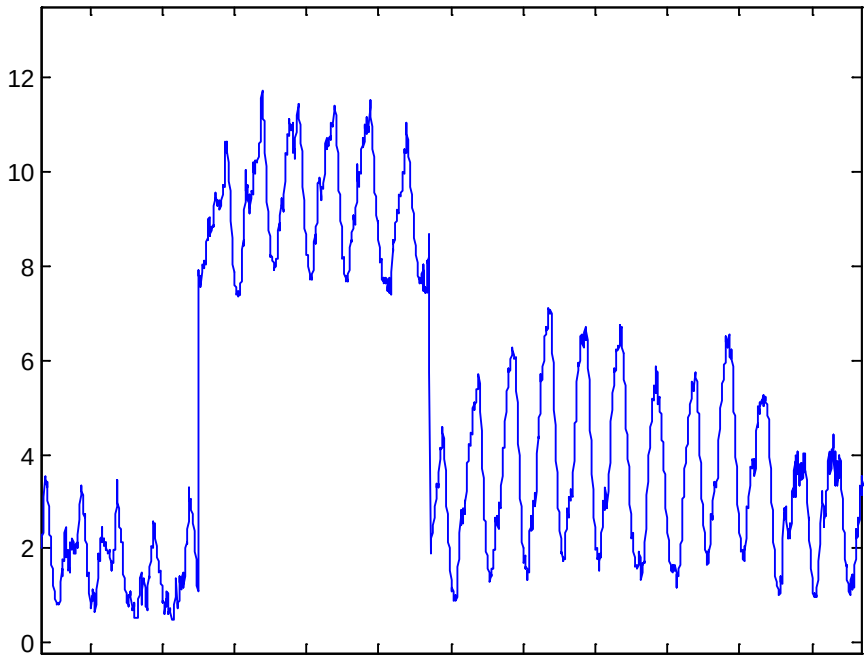

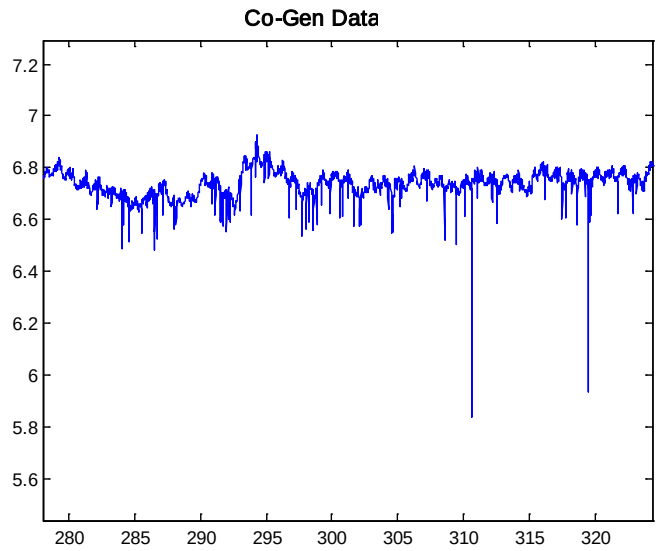

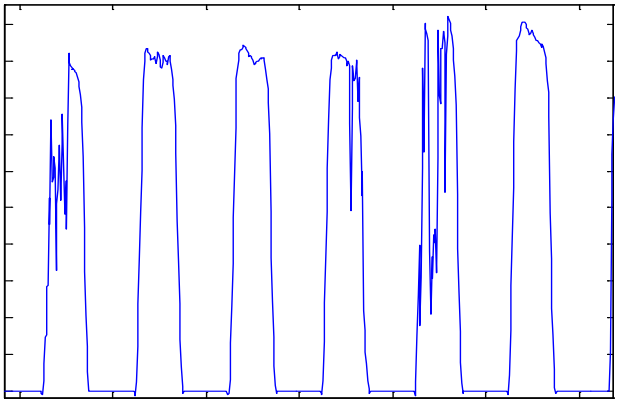

Renewable Integration,
Power Control Challenges

Heating/Cooling Loads

Thermal Load Management & Demand Limit

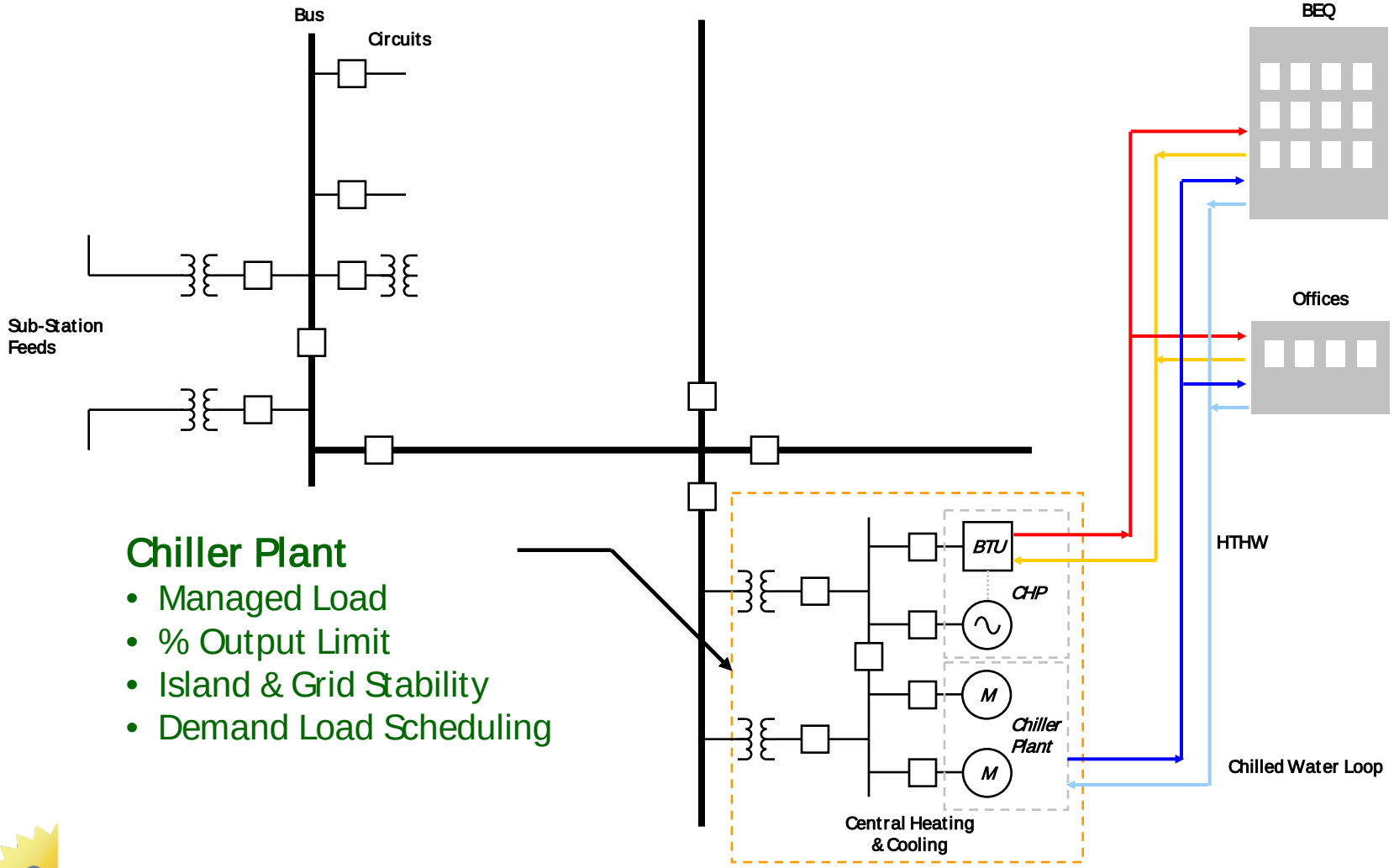

Chiller Plant

- Managed Load
- % Output Limit
- Island & Grid Stability
- Demand Load Scheduling

GovEnergy
www.govenergy.gov

GovEnergy 2010

Local Power Generation

Backup Diesel Power Strategically Utilized

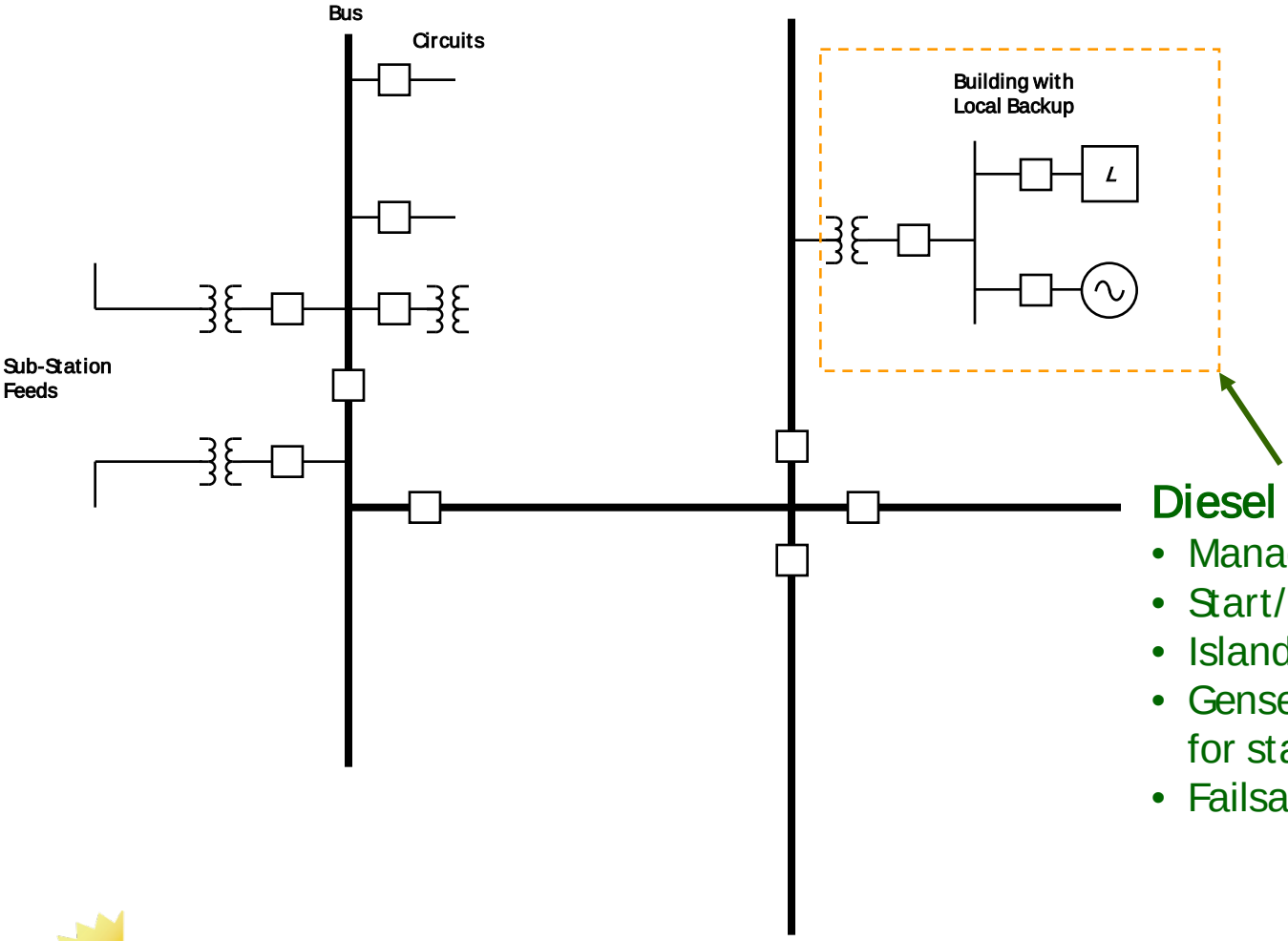

Diesel Gensets

- Managed for Emergency Use
- Start/Stop Commands
- Island & Grid Stability
- Gensets started in droop mode for stability
- Failsafe & Backup

GovEnergy
www.govenergy.gov

GovEnergy 2010

Temporary Buildings

Load Reduction for Peak/Off-Hours Management

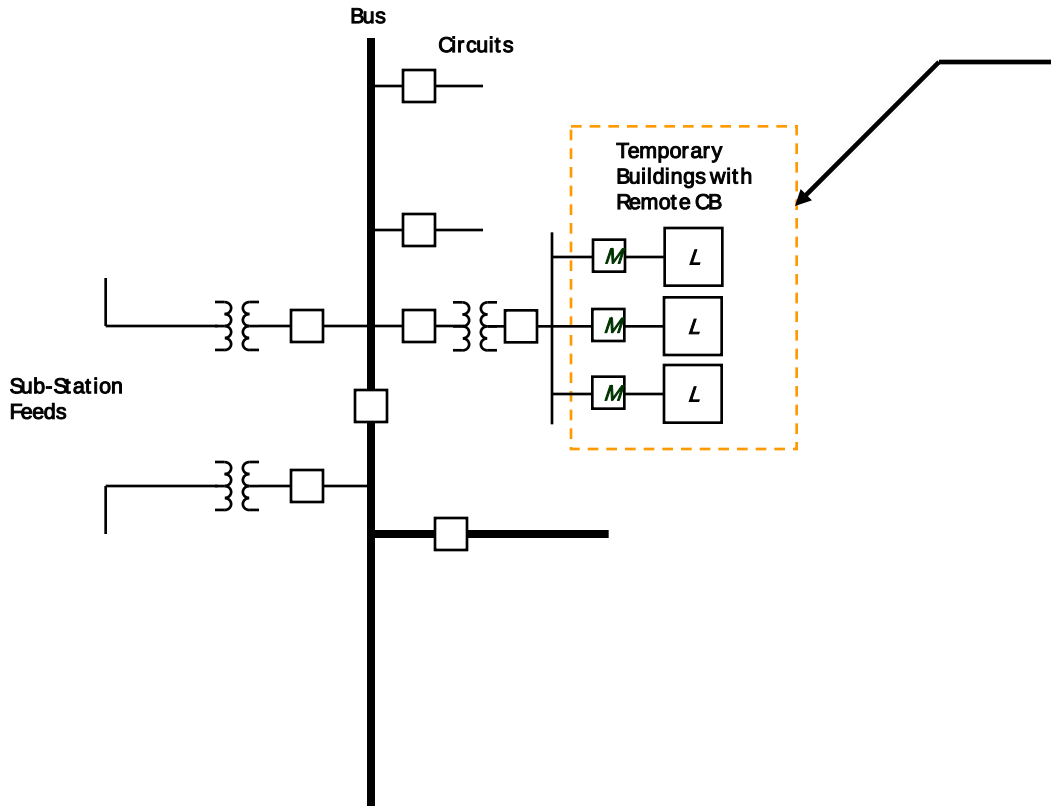

Temporary Trailers

- Managed Load
- On/Off CB Control
- Off-Hours/Peak
- Loads dropped during grid island & optimization

GovEnergy
www.govenergy.gov

Dedicated Wireless Communications

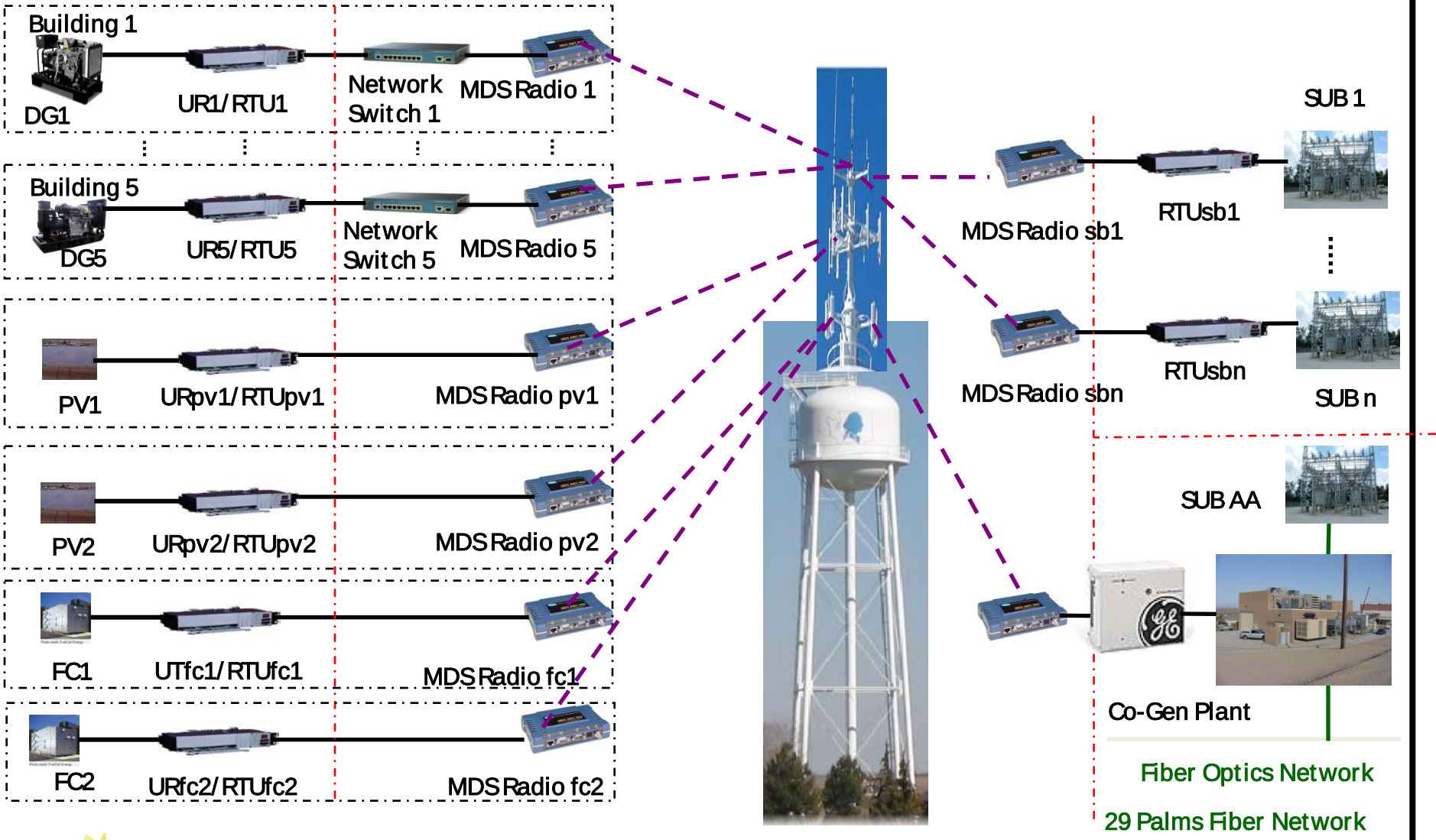

GovEnergy
www.govenergy.gov

GovEnergy 2010

U90 Microgrid Controller

Utility-grade substation device based on the GE UR+ platform

Front Panel HMI:	Annunciator, Mimic Diagram (control), Metering
Logic Engine:	Boolean, Timers, Counters, Latches, Math, Time-Of-Day
Communication ports:	Ethernet(3), Serial, USB, Irig-B
Protocols:	DNP, Modbus, IEC61850
I/O:	Voltage, Current, and Contact Inputs, Contact Outputs
Recording:	Transient & Disturbance Recorder, Data & Event Logger
Metering:	Voltage/Current/ Power/Energy/Frequency/Sequence

GovEnergy
www.govenergy.gov

GovEnergy 2010

Microgrid Summary

System architecture, control algorithms, and hardware that promote …

- Flexibility to integrate a diverse set of controllable DER assets
- Integration of renewable energy assets
- Improved energy efficiency and optimal energy utilization
- Reduction in cost of energy and total cost of ownership
- Aggregation and algorithms to enable dispatch ability
- Improved power quality and availability in islanded operation

Microgrid technology provides installation operators with wide range of benefits, *including energy surety and extension of operations* through greater utilization of renewable resources

imagination at work