GovEnergy
www.govenergy.gov

· August 15-18, 2010 · Dallas, Texas ·
· Dallas Convention Center ·

Efficient Irrigation Concepts

The Big Picture

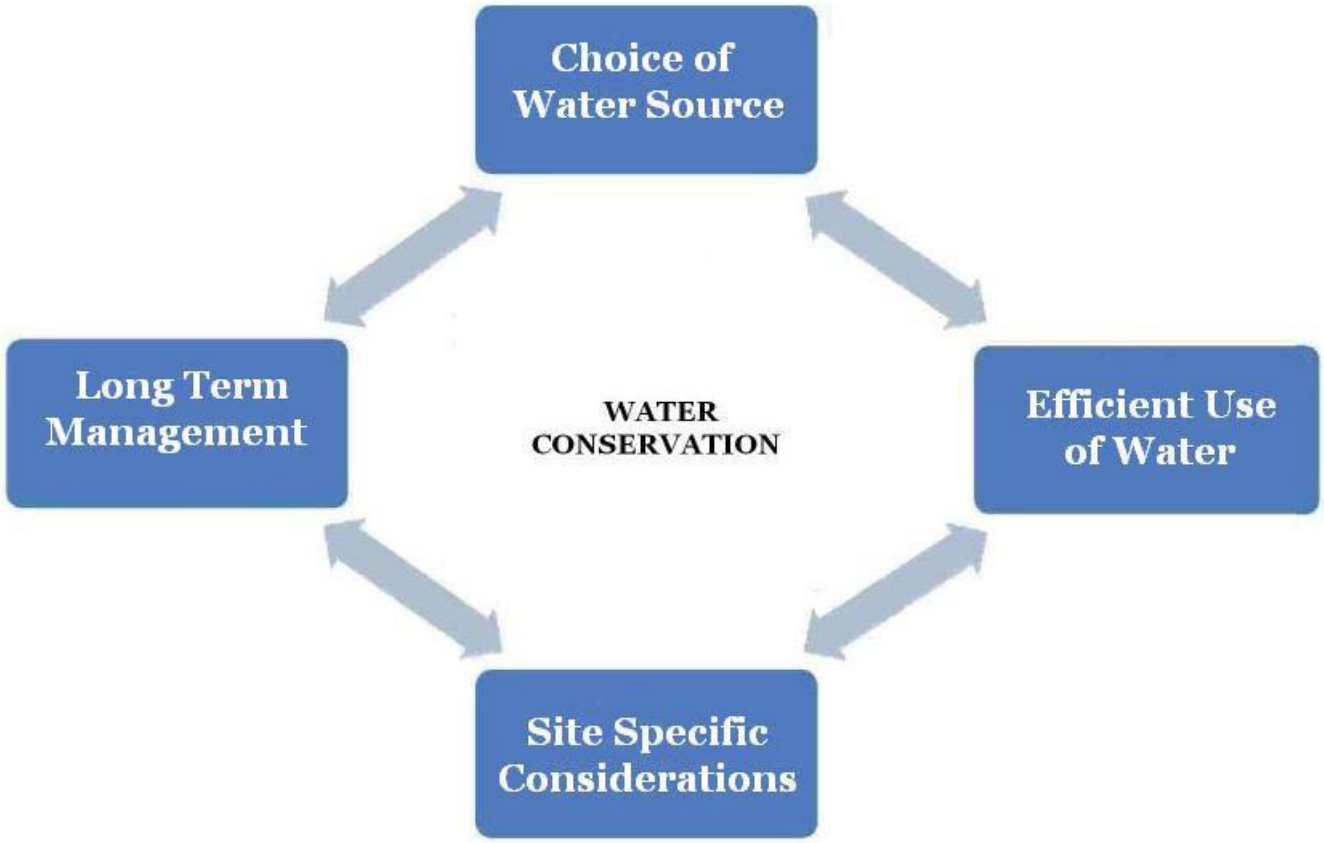

GovEnergy 2010

It’s More than Just the Water

- Site Selection
- Plant Selection
- Environment
- Climate
- Irrigation Design
- Management/Maintenance of System

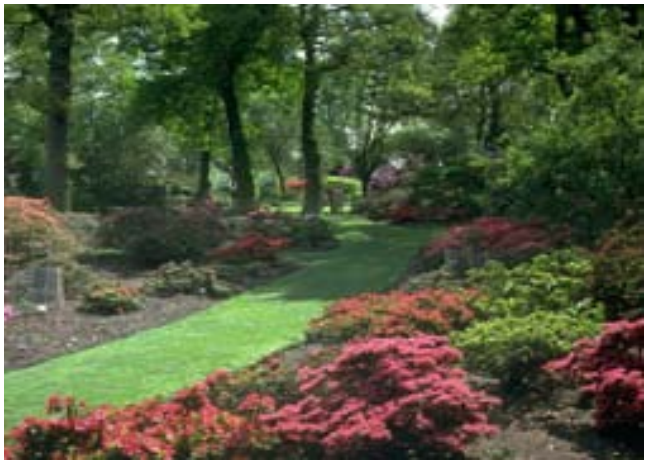

GovEnergy
www.govenergy.gov

Irrigation Design Concepts

1. Distribution Uniformity
2. Matched precipitation rate
3. Proper zoning
4. Delive
5. Water
6. Low H
7. ET ba

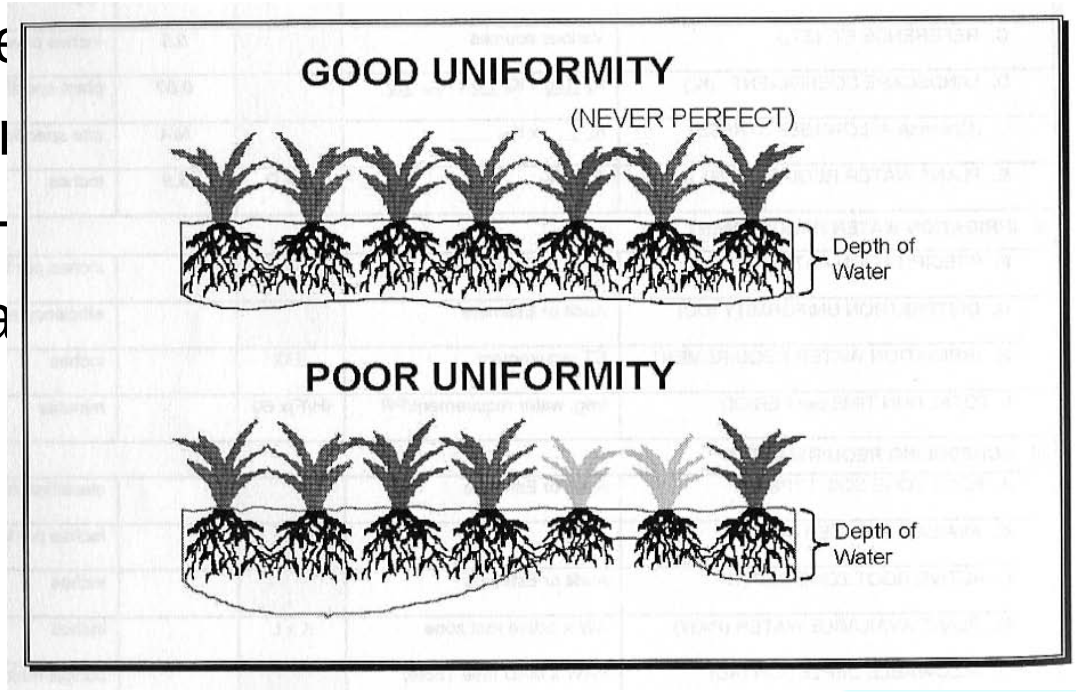

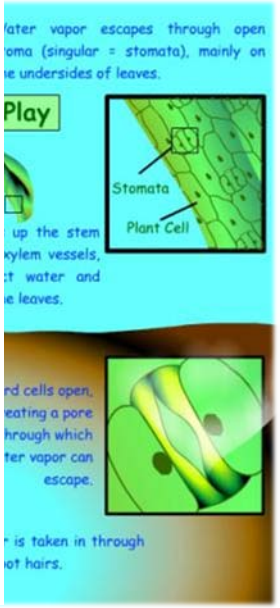

GovEnergy 2010

Water Audits

1. Pre-Audit Inspection of system and tune up
2. Run system and flag heads
3. Lay out catchment devices in a grid pattern
4.
5.
6.
7.

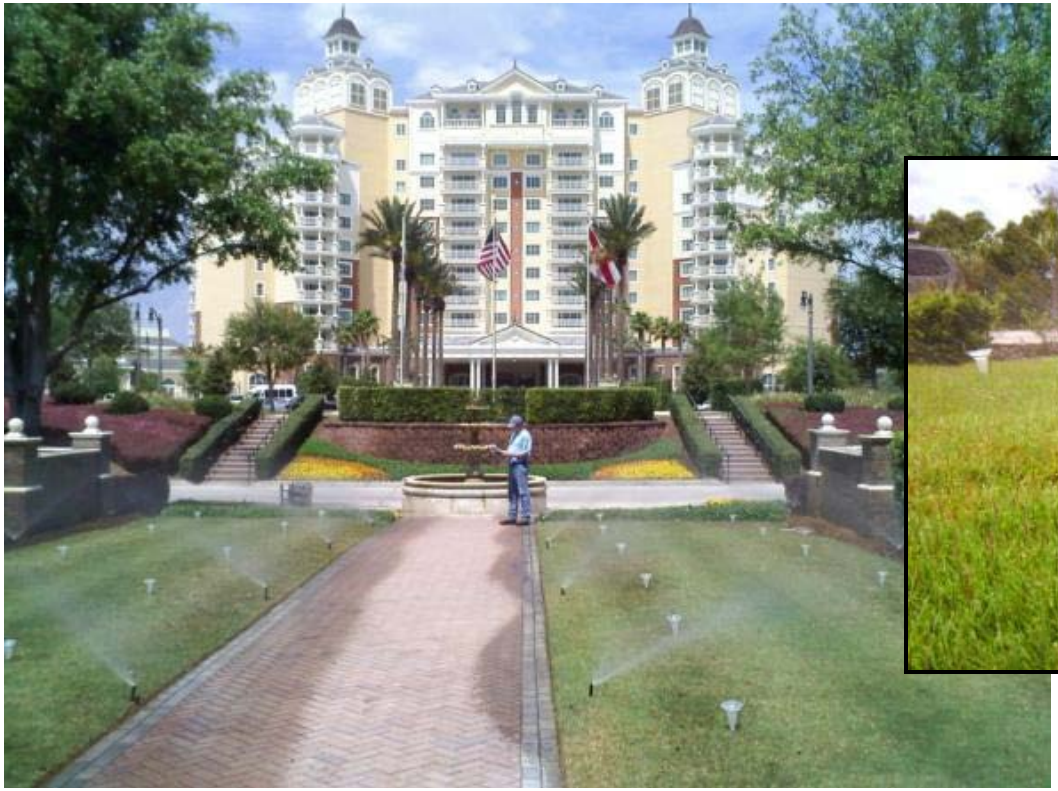

GovEnergy 2010

Performance Calculations Worksheets

ROTOR WORKSHEET #1 – SITE INSPECTION
Station Data

Site Name _____ Audit Date _____

Candidate ID # _____ Sheet # _____ of _____ (use additional sheets if needed)

This inspection is only necessary on the zones being audited. Record the number of defects for each sprinkler problem in check mark the zone problems. Leave blank if no problem exists.

Controller Identification										
Station Number										
Plant Material Type										
Sprinkler Type										
Observed Problems:										
Valve Malfunctions										
Low Pressure										
High Pressure										
Tilted Sprinklers										
Spray Deflection										
Sunken Sprinklers										
Plugged Equipment										
Arc Misalignment										
Low Sprinkler Drainage										
Leaky Seals or Fittings										
Lateral or Drip Line Leaks										
Missing or Broken Heads										
Slow Drainage or Ponding										
Compaction/Thatch/Runoff										

Notes and Comments:

ROTOR WORKSHEET #2 – SITE INSPECTION
Controller and Point of Connection (POC) Information

Site Name _____ Audit Date _____

Candidate ID # _____ Sheet # _____ of _____ (use additional sheets if needed)

Central Control ____yes____no

Controller Make & Model:

Features:

Number of Stations		Minimum Run Time	min.	Maximum Run Time	min.
Number of Programs		Cycles per Program		Stations per Program	
Days per week		Maximum hours per day		Calendar period	
Skip Day		Cycle Soak		Percent Adjust	
Other controller features					
List sensors installed/capabilities					

Current Schedule Information (for zones being audited only; use additional sheets if needed)

Program	Start Time(s)	Start Days	Cycle/Rest Time	Station	Run Time

POC Pressure Data

Dynamic pressure during normal irrigation: _____ psi time of day _____

Static pressure during site inspection: _____ psi time of day _____

Notes: Backflow Device, Pump Station, Regulator

POC Flow Data (use catalog data if non-metered sources exist)

Meter Number	Station Number	gallons (cf)	Beginning Readings	Ending Readings	Total	Beginning Time	Ending Time	Elapsed Time

June 2010

GovEnergy
www.govenergy.gov

GovEnergy 2010

Performance Calculations Worksheets

ROTOR WORKSHEET #3 – TEST AREA DATA AND MAP

Site Name: _____ Sub Area: _____ Audit Date: _____ Cand ID #: _____

STATION # _____

CONTROLLER _____

RUN TIME _____ min.

PRESSURE _____ psi

PLANT MATERIAL
- ☐ cool season turf
- ☐ warm season turf
- ☐ ground cover
- ☐ shrubs

DENSITY FACTOR (K_d)
- ☐ high
- ☐ average
- ☐ low

MICROCLIMATE FACTOR (K_{mc})
- ☐ high
- ☐ average
- ☐ low

ROOTZONE DEPTH
_____ inches

SOIL TYPE
- ☐ clay
- ☐ loam
- ☐ sand
- ☐ _____

ZONE
- ☐ overlap
- ☐ stand-alone

← Indicate north and ALL audit area dimensions →

O = SPRINKLER Record the location of each sprinkler and sprinkler spacing.

X = CATCH DEVICE Record the location of each catch device and catch amount.

June 2010

ROTOR WORKSHEET #4 – DU AND PR CALCULATIONS

Site Name/Location _____

Audit Date _____ Candidate ID # _____

All values and calculations must be completed on this page; auditing software is not acceptable for use in determining these values.

Run time (t_R): _____ min. Catchment Type: _____ Catchment Device Area (A_{CD}): _____ sq. in.

1) Record ALL catch device values 2) circle ALL values used to calculate lower quarter

Can #1 ____	#11 ____	#21 ____	#31 ____	#41 ____	#51 ____	#61 ____
Can #2 ____	#12 ____	#22 ____	#32 ____	#42 ____	#52 ____	#62 ____
Can #3 ____	#13 ____	#23 ____	#33 ____	#43 ____	#53 ____	#63 ____
Can #4 ____	#14 ____	#24 ____	#34 ____	#44 ____	#54 ____	#64 ____
Can #5 ____	#15 ____	#25 ____	#35 ____	#45 ____	#55 ____	#65 ____
Can #6 ____	#16 ____	#26 ____	#36 ____	#46 ____	#56 ____	#66 ____
Can #7 ____	#17 ____	#27 ____	#37 ____	#47 ____	#57 ____	#67 ____
Can #8 ____	#18 ____	#28 ____	#38 ____	#48 ____	#58 ____	#68 ____
Can #9 ____	#19 ____	#29 ____	#39 ____	#49 ____	#59 ____	#69 ____
Can #10 ____	#20 ____	#30 ____	#40 ____	#50 ____	#60 ____	#70 ____
Column Subtotals ____	____	____	____	____	____	____

TOTAL CATCH: _____ mL AVERAGE CATCH: _____ mL

TOTAL CATCH IN LOWER QUARTER: _____ mL AVERAGE CATCH IN LOWER QUARTER: _____ mL

Calculate Distribution Uniformity (DU)

$$DU_{LQ} = \left(\frac{\text{Average Catch in Lower Quarter}}{\text{Average Catch Overall}}\right) = \left(\frac{\_\_\_\_\text{mL}}{\_\_\_\_\text{mL}}\right) = \_\_\_\_\_$$

DISTRIBUTION UNIFORMITY (DU) = _____

Calculate Precipitation Rate (PR)

$$PR_{net} = \frac{3.66 \times V_{avg}}{t_R \times A_{CD}} = \frac{3.66 \times (\_\_\_\_\text{mL})}{(\_\_\_\text{min}) \times (\_\_\_\text{in.}^2)} = \_\_\_\_\text{in./h}$$

PRECIPITATION RATE (PR_{net}) = _____ in. / h

June 2010

GovEnergy
www.govenergy.gov

GovEnergy 2010

Performance Calculations Worksheets

ROTOR WORKSHEET #5 – SCHEDULE

Site Name/Location _____

Audit Date _____ Candidate ID # _____

Controller No. _____ Station No. _____ Reference Period _____

ITEM	SOURCE		VALUE	UNIT or FUNCTION
I. PLANT WATER REQUIREMENT				
A. PLANT MATERIAL	Audit or Planting Plan			classification
B. REFERENCE PERIOD	Judgment			days
C. REFERENCE ET (ET_o)	Various sources			inches of water
D. LANDSCAPE COEFFICIENT (K_L)	K_s ____ x K_d ____ x K_{mc} ____			plant specific multiplier
(Optional) ALLOWABLE STRESS	K_L ____ x K_{as} ____			*site specific multiplier*
E. LANDSCAPE ET (ET_L)	K_L x ET_o	C x D		inches per ref. period
II. IRRIGATION WATER REQUIREMENT				
F. NET PRECIPITATION RATE (PR_{NET})	(3.66 x V_{avg}) / (t_R x A_{CD})			inches per hour
G. DISTRIBUTION UNIFORMITY (DU_{LQ})	Avg. LQ / Average			decimal
H. IRRIGATION WATER REQUIREMENT (IWR)	ET_L / DU_{LQ}	E/G		inches
I. TOTAL RUN TIME per PERIOD (RT)	(IWR / PR) X 60	(H/F) X 60		minutes (round off)
III. SCHEDULING REQUIREMENTS				
J. ROOT ZONE SOIL TYPE	Audit or Estimate			classification
K. AVAILABLE WATER (AW)	Table			inches per inch of soil
L. ACTIVE ROOT ZONE DEPTH (RZ)	Audit or Estimate			inches
M. PLANT AVAILABLE WATER (PAW)	AW x active root zone	K x L		inches
N. ALLOWABLE DEPLETION (AD)	PAW x MAD (see Table)			inches
O. IRRIGATION DAYS per PERIOD *	ET_L / AD	E/N		days in a period (round up)
P. TOTAL RUN TIME per DAY *	Total Run Time per Period / Irrigation Days per Period	I/O		minutes (round off)
Q. MAX RUN TIME per CYCLE (CRT) *	60 x (Basic Intake Rate / PR_{NET}) -OR- Visual Observation			minutes (round down)
R. CYCLES per DAY *	Total run time per day / CRT	P/Q		repeats to avoid runoff (round up)
S. RUN TIME per CYCLE *	Total Run Time per Day / Cycles per Day	P/R		minutes (round down)

* Must be expressed as an integer.

June 2010

- Precipitation Rate $PR_{net} = 3.66 \times V_{avg} / t_r \times A_{CD}$
  - PR_{net} = station precip rate (in/hr)
  - V_{avg} = avg catch volume for station (ml)
  - t_r = test run time (min.)
  - A_{CD} = catch device throat area (in^2)
- Distribution Uniformity DU_{LQ}
  - Low quarter distribution uniformity (decimals)
  - DU_{LQ} = Avg Catch of Lower Quarter/Avg Catchment Overall

GovEnergy
www.govenergy.gov

GovEnergy 2010

Anatomy of an Irrigation System

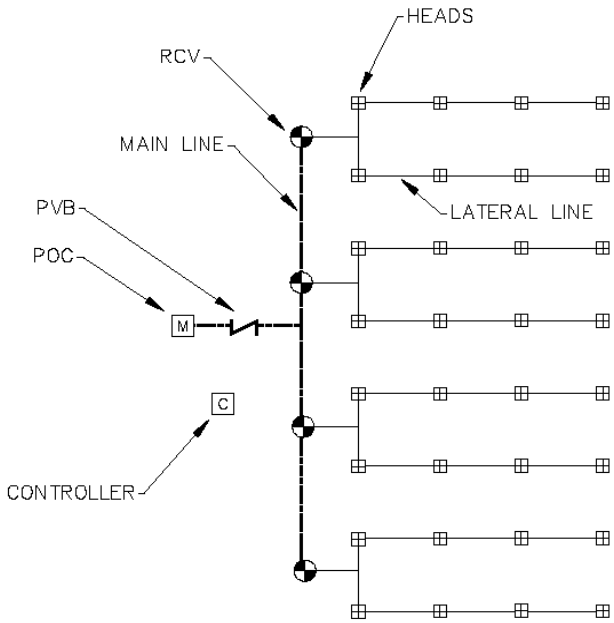

POC - Point of Connection
source of water

PVB - Pressure Vaccuum Breaker
protects water source

Main line – pipe, commonly PVC
carries water from source to RCV's

RCV – Remote Control Valve
Controls flow of water from main line to lateral lines

Lateral line – pipe, commonly PVC
carries water from RCV to 'heads'

Heads – micro, spray, rotary, etc
distributes water to the plants/soil

Controller – electrically tells the RCV's when to open and close

GovEnergy
www.govenergy.gov

GovEnergy 2010

POC Backflow Protection

ATMOSPHERIC VACCUUM BREAKER (AVB)

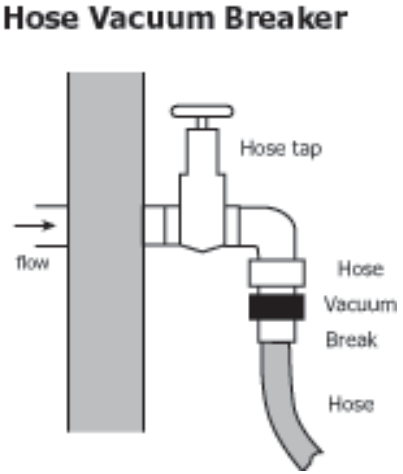

PRESSURE VACCUUM BREAKER (PVB)

REDUCED PRES. DOUBLE CHECK VALVE ASSEMBLY

REDUCED PRESSURE BACKFLOW ASSEMBLY (RPZ)

GovEnergy 2010

GovEnergy
www.govenergy.gov

Zoning

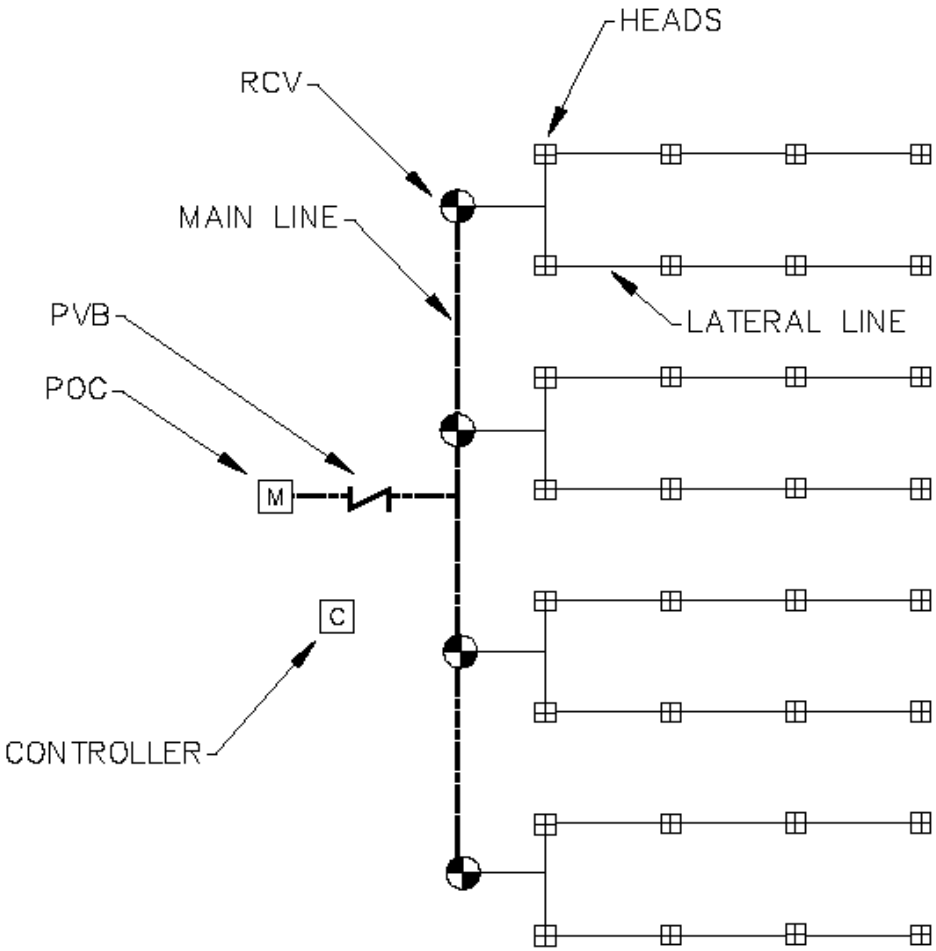

om

'zones'
ically

mined by
cs of the

GovEnergy 2010

Choosing Appropriate Equipment

Low Volume/Drip/Micro-Irrigation (GPH) 90% Eff.

Is the best type for small (< 4'), non-linear, broken up planting areas. Has manually matched precipitation rates. Can handle most situations, sod is the most difficult

Spray (GPM) 65% Eff.

Accomodates from 4' to 15' radius, specialty pattern nozzles also available (4'x 30', 5' x 5'). Has matched precipitation rates. Very flexible nozzle selection allows it to handle most situations, narrow areas are the most difficult. Has the highest precipitation rate.

Turf Rotary (GPM) 80% Eff.

Accommodates from 4' to 30' radius, a small selection of specialty pattern nozzles are also available (4'x 30') Has matched precipitation rates. Very flexible nozzle selection allows it to handle most situations, narrow areas are the most difficult. Despite name, functional in turf and bedding.

Rotor (GPM) 75% Eff.

Accomodates from 20' to 90' radius. Has manually matched precipitation rates. Most functional in turf applications.

GovEnergy
www.govenergy.gov

GovEnergy 2010

Control Systems

Old School
Commonly found on older pump supplied systems

Solid State

Basic conventional controller

Et modules

Retrofits/converts basic to 'smart'

'Smart' Technology

Et received daily through pager, run times adjusted

Advanced Technology
Sensor inputs, analysis

Central Control
Computerized, professional management, multiple sites

GovEnergy
www.govenergy.gov

GovEnergy 2010

Scheduling

Accomplished through the controller

How often (frequency) and how long (duration)

Run times are based on numerous variables depending on the goal of the irrigation:

1. the current Et rate
2. precipitation rate of the irrigation system
3. the infiltration rate and capacity of the soil
4. the water needs of the plants
5. how much water is currently available to the plant
6. etc…

However, essentially:

Estimate how much water you need to apply.
Divided by your net precipitation rate

A 'SMART' controller (after initial programming) will minimize this process

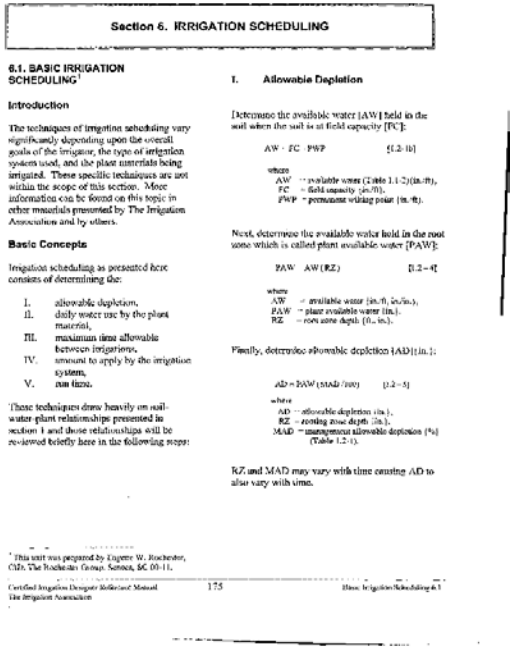

Section 6. IRRIGATION SCHEDULING

6.1. BASIC IRRIGATION SCHEDULING[1]

Introduction

The techniques of irrigation scheduling vary significantly depending upon the overall goals of the irrigator, the type of irrigation system used, and the plant materials being irrigated. These specific techniques are not within the scope of this section. More information can be found on this topic in other materials presented by The Irrigation Association and by others.

Basic Concepts

Irrigation scheduling as presented here consists of determining the:

I. allowable depletion,
II. daily water use by the plant material,
III. maximum time allowable between irrigations,
IV. amount to apply by the irrigation system,
V. run time.

These techniques draw heavily on soil-water-plant relationships presented in section 1 and those relationships will be reviewed briefly here in the following steps:

I. Allowable Depletion

Determine the available water [AW] held in the soil when the soil is at field capacity [FC]:

$$AW = FC - PWP \qquad [1.2\text{-}10]$$

where
AW = available water (Table 1.1-2) (in./ft),
FC = field capacity (in./ft),
PWP = permanent wilting point (in./ft).

Next, determine the available water held in the root zone which is called plant available water [PAW]:

$$PAW = AW(RZ) \qquad [1.2\text{-}4]$$

where
AW = available water (in./ft, in./in.),
PAW = plant available water (in.),
RZ = root zone depth (ft., in.).

Finally, determine allowable depletion [AD] (in.):

$$AD = PAW(MAD/100) \qquad [1.2\text{-}5]$$

where
AD = allowable depletion (in.),
RZ = rooting zone depth (in.),
MAD = management allowable depletion (%) (Table 1.2-1).

RZ and MAD may vary with time causing AD to also vary with time.

[1] This unit was prepared by Eugene W. Rochester, CID, The Rochester Group, Seneca, SC 00-11.

Certified Irrigation Designer Reference Manual
The Irrigation Association
175
Basic Irrigation Scheduling & I

GovEnergy
www.govenergy.gov

GovEnergy 2010

Largest Opportunity for Efficiency Increases

Irrigation type

Move from 65% to 85% (CIT) efficiency

Weather station

Can generate local Et

Controller technology

25% savings (mfr) with Et based scheduling

Rain Sensor and Soil Moisture Sensor

35%+ savings (UF studies) with this technology

Professional management of system

GovEnergy
www.govenergy.gov

GovEnergy 2010

Typical Irrigation System Adjustments

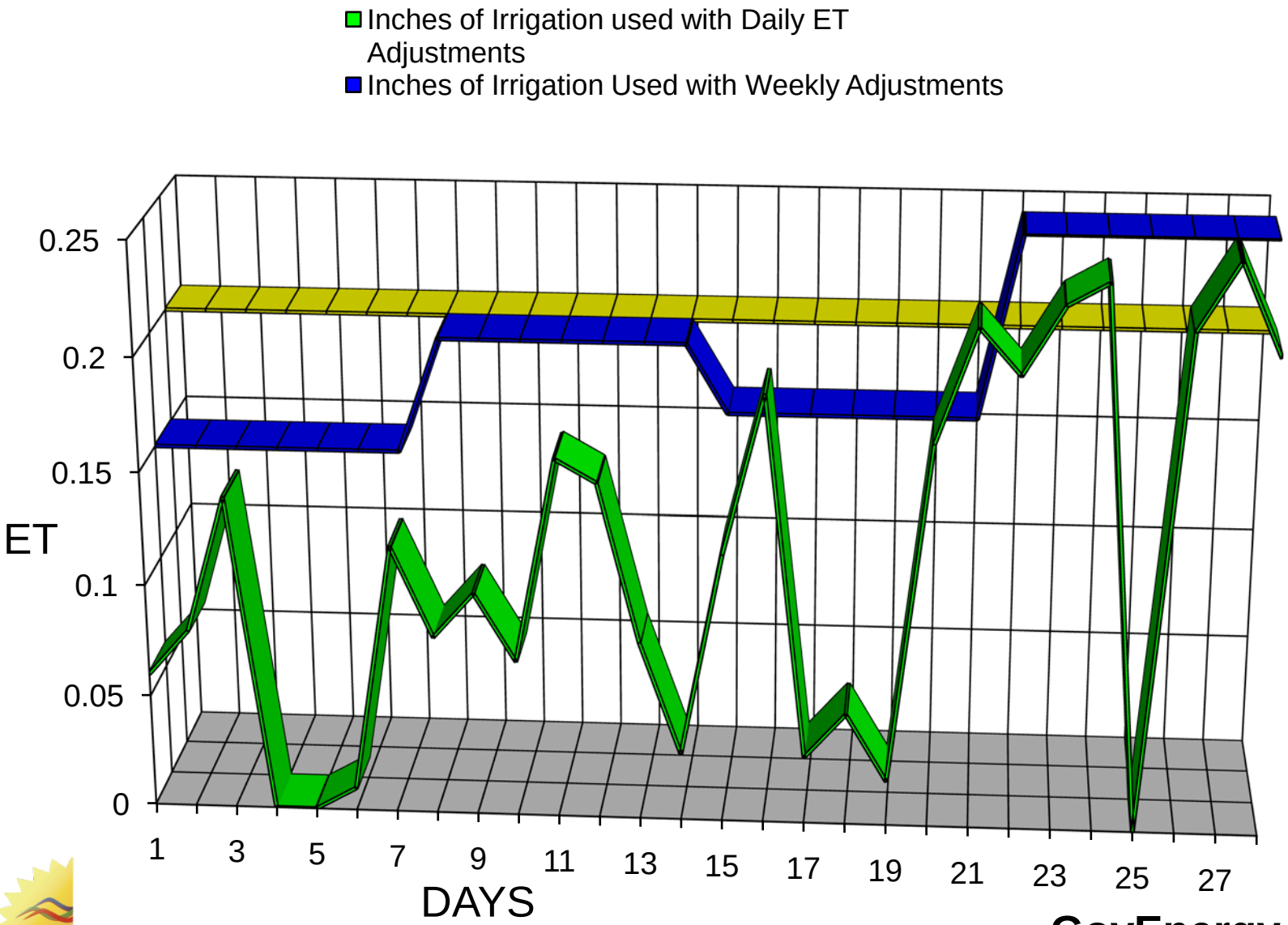

GovEnergy 2010

Central Control System

Airports &
Highways

Parks &
Recreation

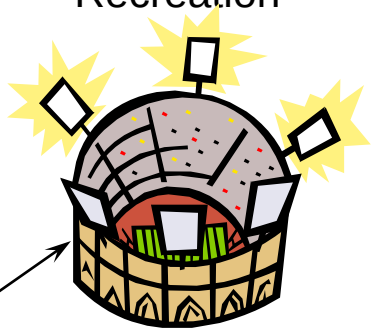

Central Control

Total Professionally Managed Irrigation
From One Location

Institutions

Commercial

GovEnergy
www.govenergy.gov

GovEnergy 2010

Why Central Control Systems?

- A professionally managed central control system saves you water, labor & energy.
- Studies have shown that daily automated ET (ET is a measurement of the inches of water lost to the plants use in 24 hrs) adjustment systems offer the highest potential savings.
- Central control systems utilizing automated ET adjustments have saved existing users an average of 30% or more in the first year of operation.
- Your potential savings can be calculated by looking at how you currently operate your system.

Other Savings Realized

- Site without professionally managed central control system uses 10,000,000 gallons of water each year utilizing a pump station.
- It takes @ 5 Kw (7 HP pump) to pump 100 GPM of water at 80 PSI, in 1 hour it will use 300 Kwh and pump 6,000 gallons of water
- Average cost per Kwh = $ 0.12 (U.S. Energy Information Administration.)
- Energy cost per 1,000 gallons pumped = $6.00.
- Energy cost at 100% of gallons of water used annually = $60,000.
- Average savings in water use with central control system = 30% or more, estimated 50% savings not uncommon.
- $60,000 x .30 = $20,000.
- $20,000 saved in energy costs ALONE per year if ONLY 30% savings are achieved. Potential is there for much higher amount of savings.

Questions?

Masuen
Consulting
LLC