GovEnergy
www.govenergy.gov
The Premier Energy Training Workshop
and Trade Show for Federal Agencies

A River of Energy Solutions

LEVERAGING FUEL CELL AND CHP TECHNOLOGIES

Richard Shaw – UTC Power

What is CHP?

CHP means “Combined Heat and Power”, also known as cogeneration. It is the ability to simultaneously generate electricity and useful heat from a single fuel source.

- Benefits include:
  - **Increased security -** Power and heat supplied to the facility even if the grid power is lost
  - **Higher efficiency than the grid -** less fuel is required to generate the same energy output and greatly reduce transmission/distribution loss
  - **Economic savings -** may offer hedge against volatile energy prices
  - **Positive environmental impact -** reduce carbon footprint compared to the grid
  - **Less waste -** use “free” waste-heat for applications including heating, cooling, dehumidification, and process applications

CHP Technologies

- Typical CHP technologies include:
  - Gas turbines with heat recovery unit
  - Steam boiler with steam turbine
  - Microturbines
  - Reciprocating engines
  - **Fuel Cells**

Types of Fuel Cells

	Fuel Cell Type	Primary Application	Operating Temperature
	Alkaline	Space	80 - 100°C
	Phosphoric Acid	Stationary	200 - 220°C
	Molten Carbonate	Stationary	600 - 650°C
	Solid Oxide	Stationary	650 - 1000°C
	Proton Exchange Membrane	Transportation	80 - 100°C

GovEnergy
www.govenergy.gov

How does a Fuel Cell Work?

1

Anode

As hydrogen flows into the fuel cell anode, a catalyst layer on the anode helps to separate the hydrogen atoms into protons (hydrogen ions) and electrons.

3

External Circuit

The electrons cannot pass through this electrolyte and, therefore, must flow through an external circuit in the form of electric current. This current can power an electric load.

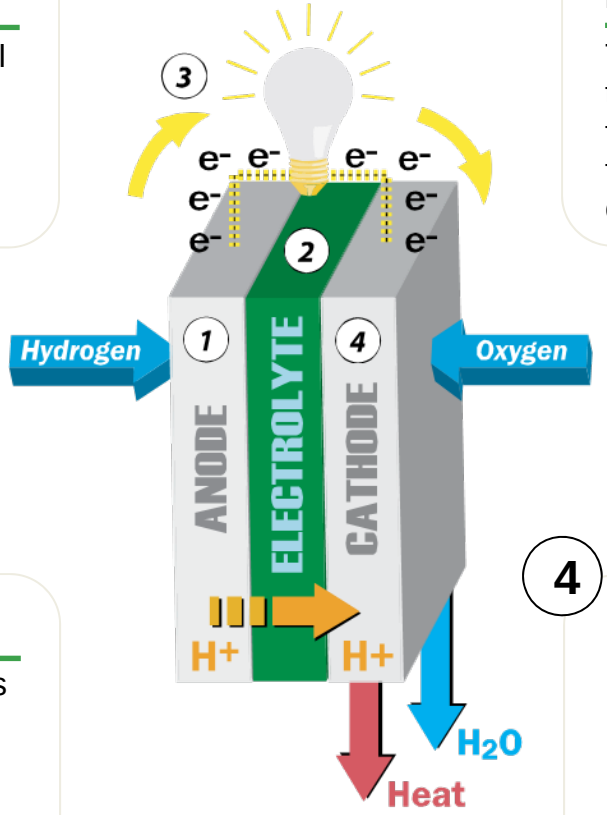

2

Electrolyte

The electrolyte in the center allows only the protons to pass through the electrolyte to the cathode side of the fuel cell.

4

Cathode

As oxygen flows into the fuel cell cathode, another catalyst layer helps the oxygen, protons, and electrons combine to produce pure water and heat.

GovEnergy
www.govenergy.gov

Stationary Fuel Cell Plants

- Manufacturers
  - UTC Power, a division of United Technologies
  - FuelCell Energy, Inc.
  - Bloom Energy
  - ClearEdge Power
  - Others
- Unit Electrical Output
  - 5 kW to 2.8 MW
- Efficiency
  - Power: 30% - 50%+ (LHV)
  - CCHP: up to 90%

Typical Fuel Cell Power Plant Components

1 **Fuel Processor**

Converts natural gas fuel to hydrogen

2 **Fuel Cell Stack**

Generates DC power from hydrogen and air

3 **Power Conditioner**

Converts DC power to high-quality AC power

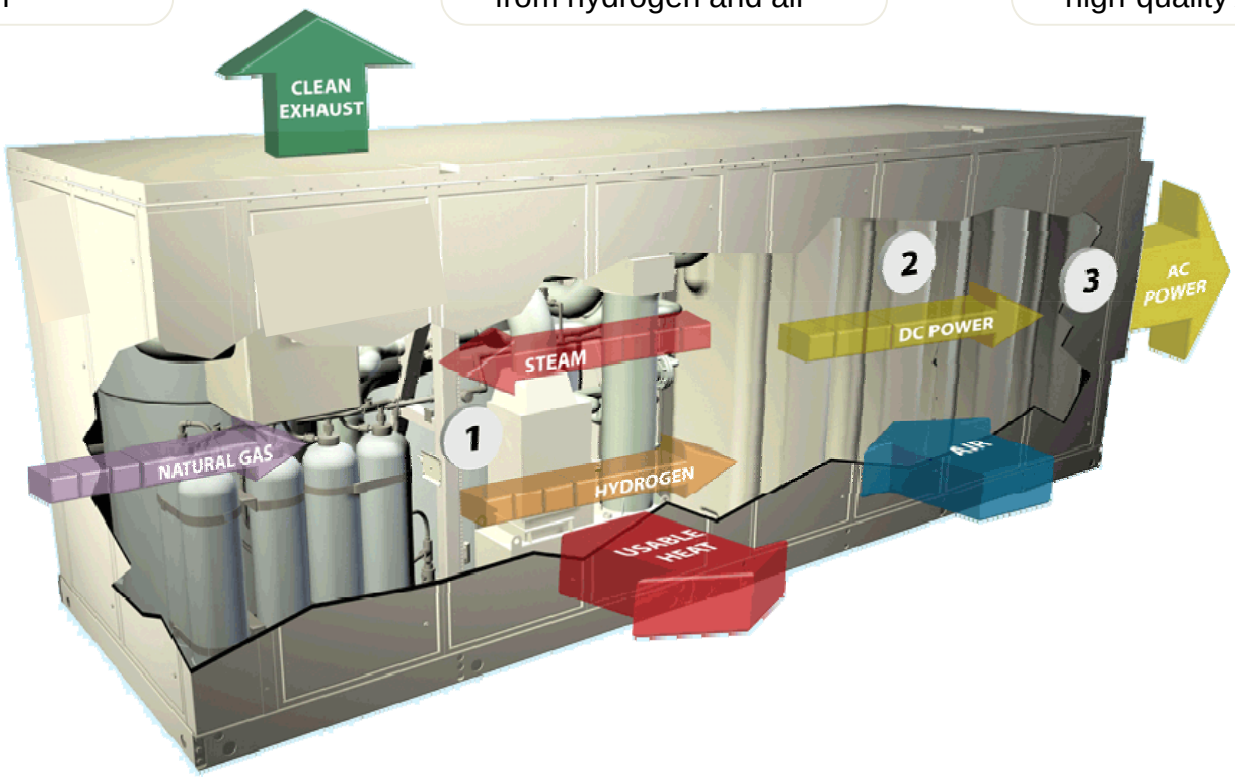

GovEnergy
www.govenergy.gov

Why a Fuel Cell and CHP?

Energy Challenges	Fuel Cell and CHP Solutions
Rising grid energy costs consuming larger portion of budgets	• Significant Energy savings through: – Increased efficiency vs. the grid – Combined heat and power • Possible to lock in energy rates
Strained utility grid, unreliable power	• Assured power generated on-site: – Business continuity – Risk mitigation – Can serve as emergency shelter
Sustainability and carbon reduction	• Clean, quiet & virtually pollution free: – Reduced emissions vs. the grid – May qualify for LEED points

GovEnergy
www.govenergy.gov

Energy Independence Technologies

ENERGY DENSITY

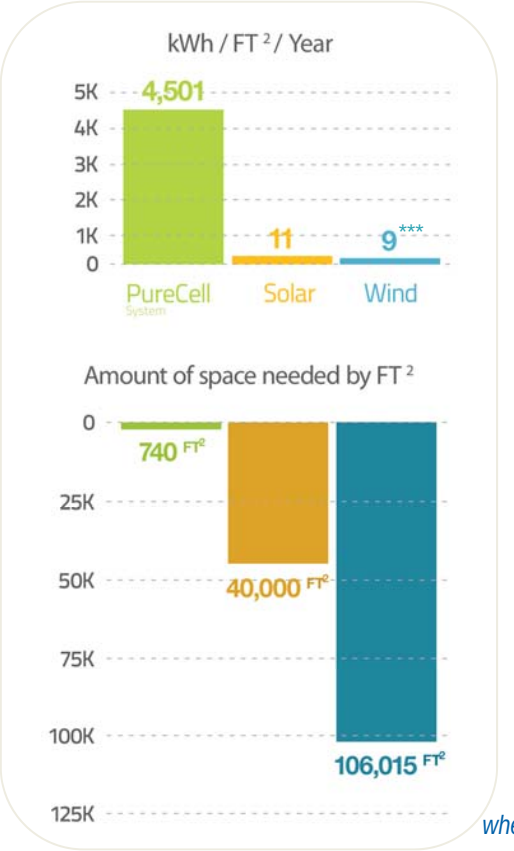

CAPACITY FACTOR (availability)

Annual output divided by the rated AC output for 8760 hours.

PAYBACK

Based on product life and simple payback, assumes zero incentive funding.

ANNUAL CO_2 REDUCTION

Carbon dioxide (CO_2) saved annually, measured in kilograms, when compared to typical central generation.

GovEnergy
www.govenergy.gov

All values normalized to 400kW

Environmental Benefits

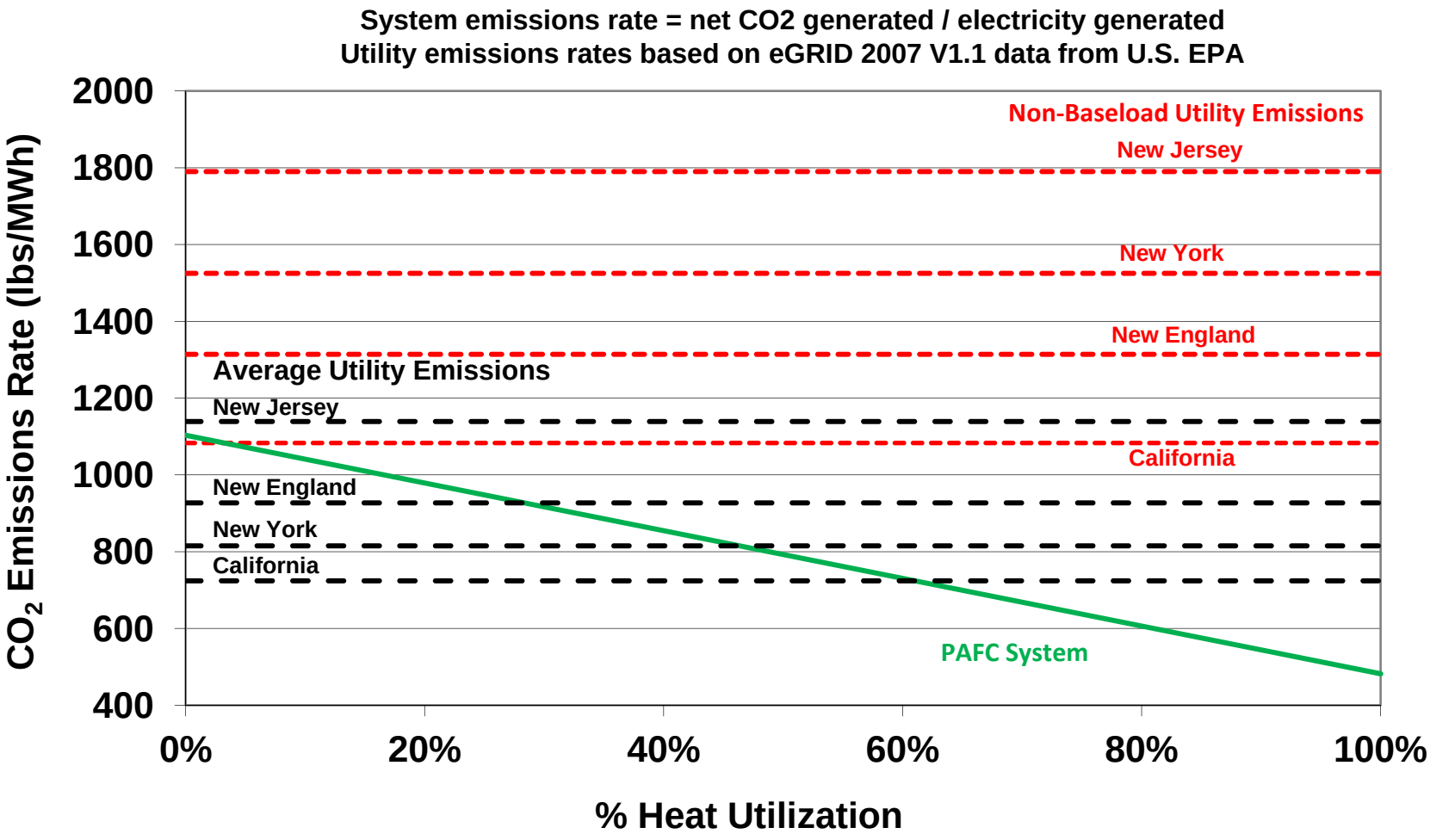

GovEnergy
www.govenergy.gov

PAFC CHP vs. The Grid: Efficiency

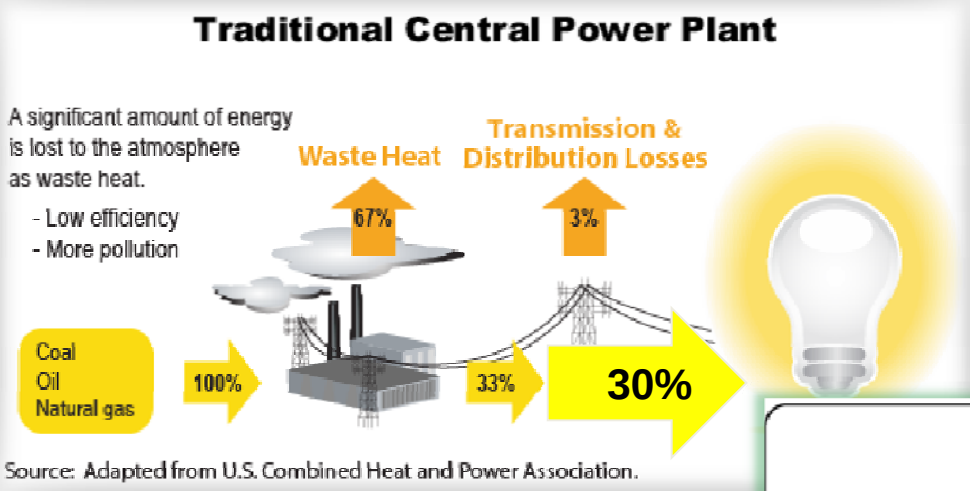

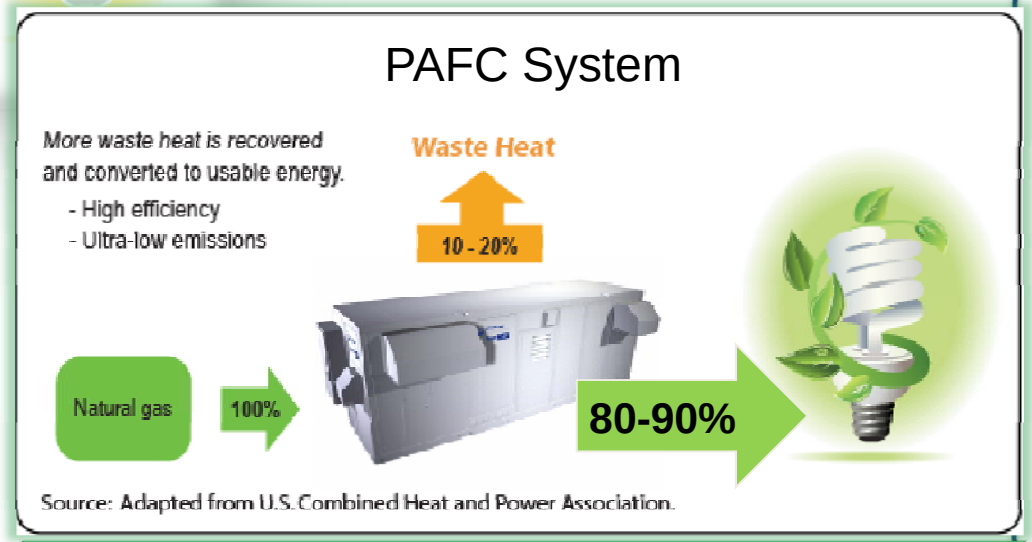

Up to 3x More Efficient

GovEnergy
www.govenergy.gov

CHP vs. The Grid: Efficiency

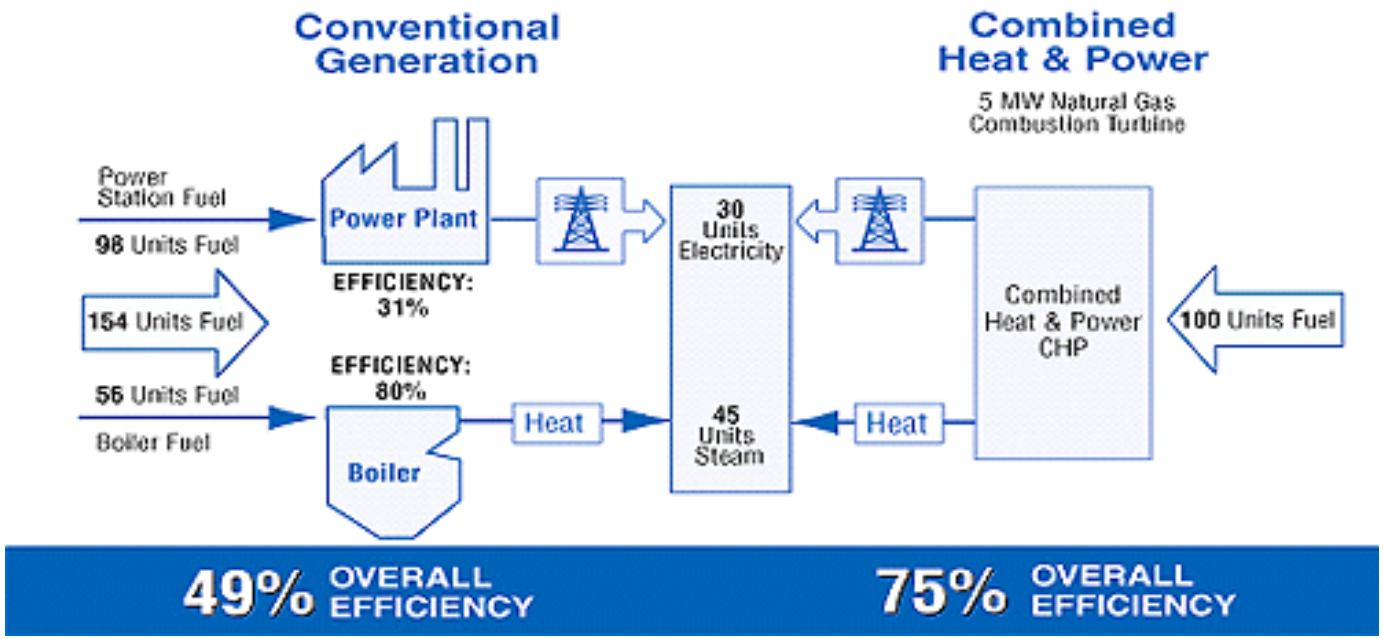

Range of efficiencies by CHP technology:

Steam Turbine: 80 percent
Diesel Engine: 70-80 percent
Natural Gas Engine: 70-80 percent
Gas Turbine: 70-75 percent
Microturbine: 65-75 percent
Fuel Cell: 65-80 percent

GovEnergy
www.govenergy.gov

Source: http://www.epa.gov/chp/basic/efficiency.html

Environmental Benefits

Example - New York

Average annual reductions† with PAFC system

CO_2	NO_x	H_2O	LEED®
1,115 metric tons*	**3 metric tons***	**4,000,000 gallons**	**Possible 4 – 6 points**
257 acres	**160 cars**	**6 Olympic pools**	**Efficiency, Innovative Design**

† Based on Natural Gas heating fuel and operation of the unit in New York

Utility emissions factors based on U.S. EPA eGRID2007 V1.1 (year 2005 data) for non-baseload generation in sub-region.
Utility water consumption based on U.S.G.S. data, 1995.

GovEnergy
www.govenergy.gov

CHP vs. The Grid: Environment

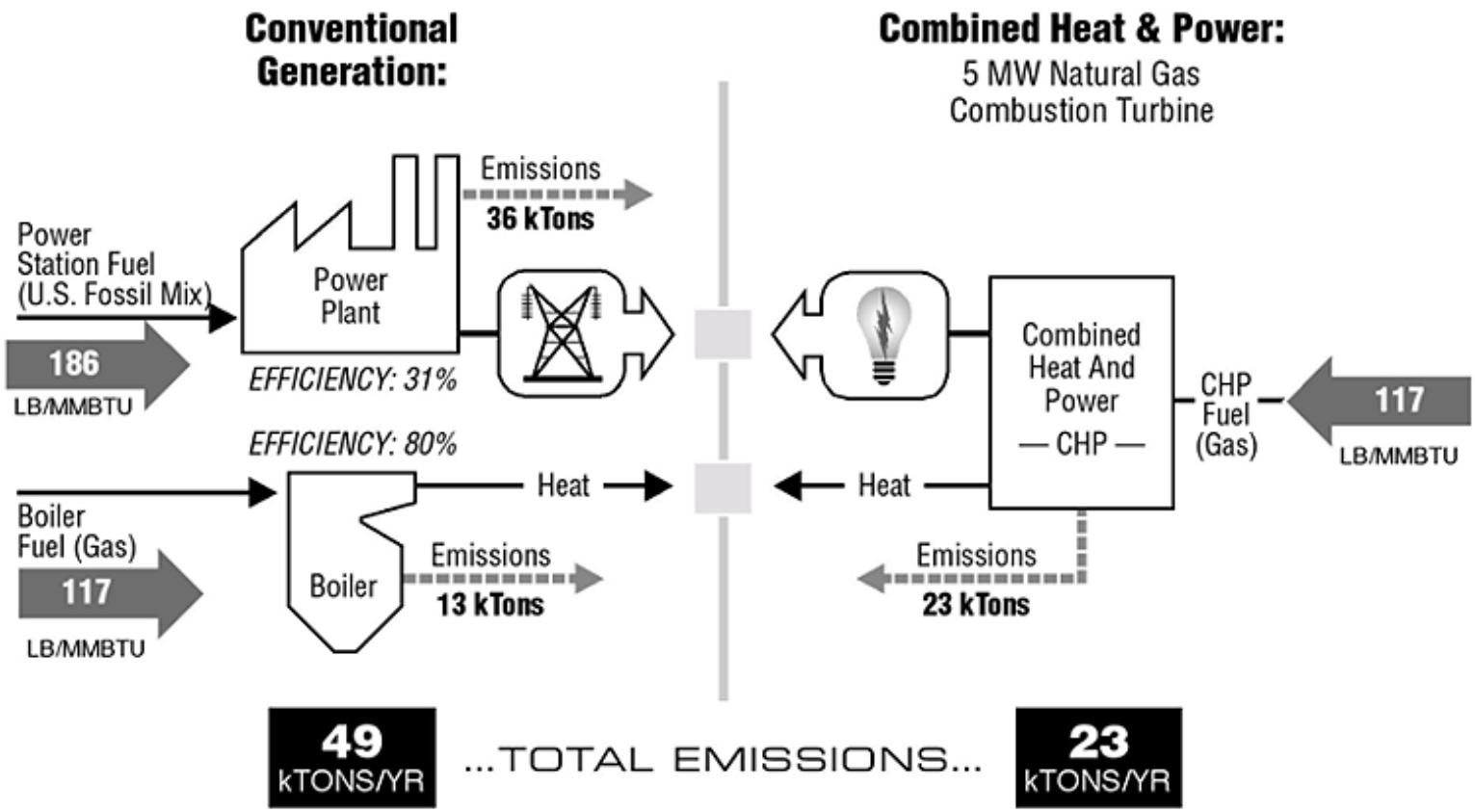

Source: http://www.epa.gov/chp/basic/environmental.html

CHP Applications

Examples of Best Fit: Facilities with 24/7 Power and Thermal Demand

Food Stores / Commissaries

Base Environments

Hospitals

Mixed Use

Lodging

Industrial

Data Center

Utilities / Microgrids

GovEnergy
www.govenergy.gov

Siting Considerations

Ground/Outdoors

Coca-Cola Refreshments
New York

Indoors

360 State Street (Mixed-use Residential)
Connecticut

Basement

Mohegan Sun Resort & Casino
Connecticut

Rooftop

Star Market (supermarket)
Massachusetts

GovEnergy
www.govenergy.gov

Heat Recovery Applications

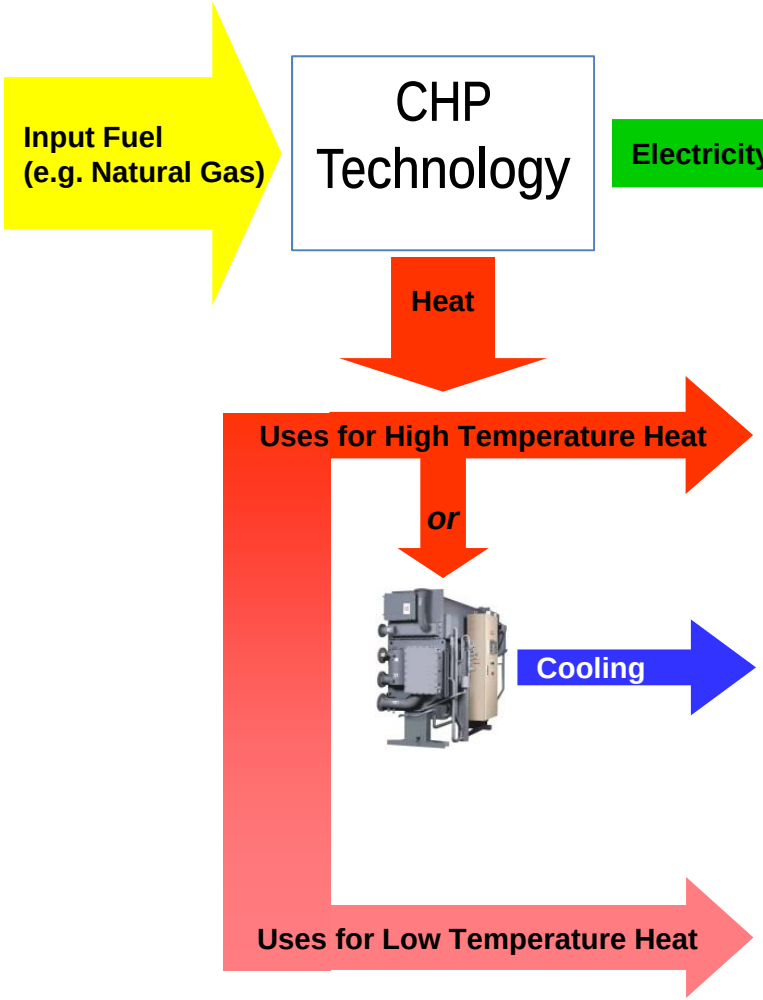

Continuous supply of power to the facility in place of the grid

Best Application	*Other Applications*
Central hydronic (hot water) heating systems	Steam boiler pre-heat
Refrigeration sub-cooling	Chilled water coils in RTUs Central chilled water systems
Domestic hot water Process water (<140°F) Hot water coils in large RTUs Desiccant regeneration	Pool heating Radiant Floor Snow melt systems Water source H/P New fan/coil units

GovEnergy
www.govenergy.gov

Heat Integration – Chilled Water

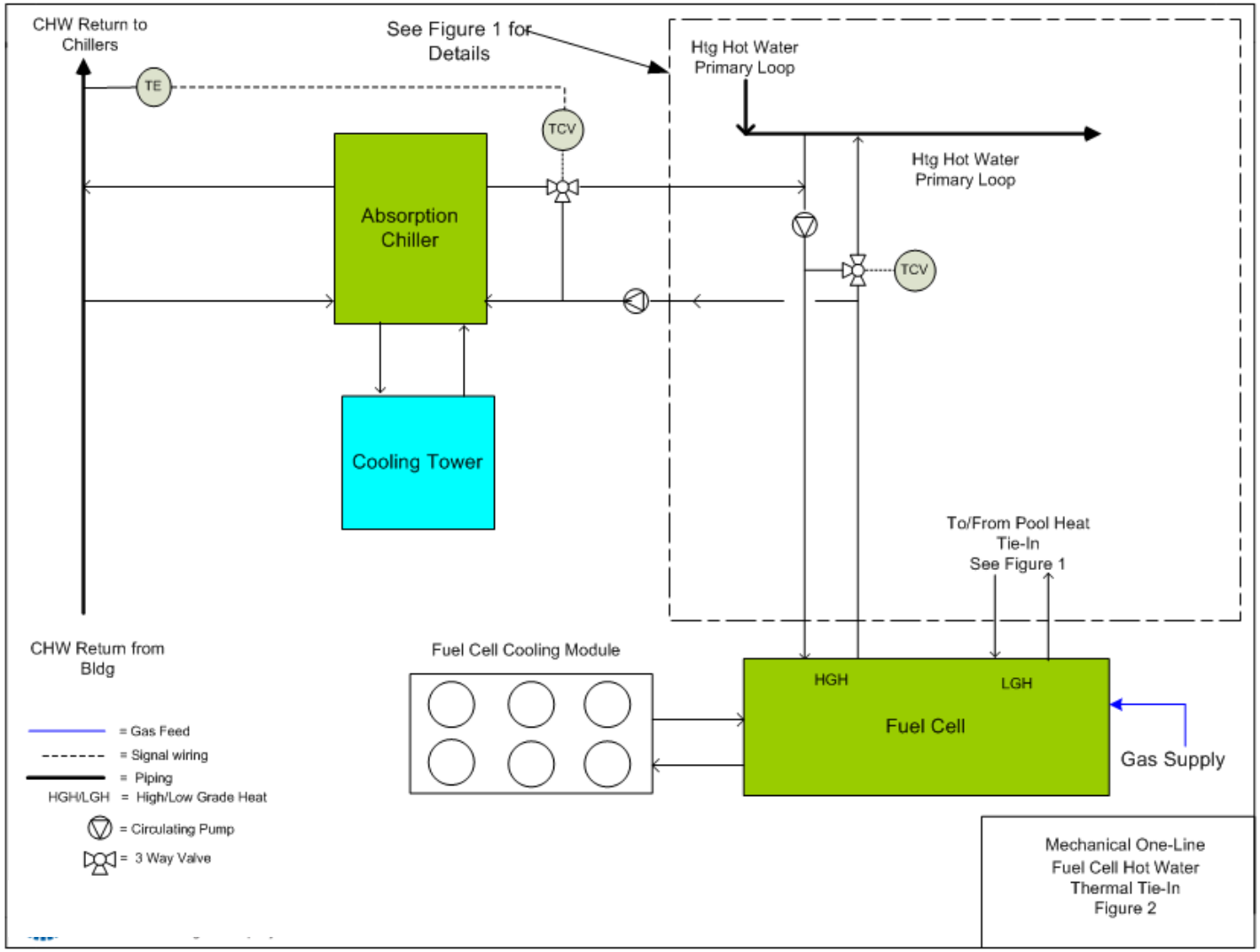

GovEnergy
www.govenergy.gov

Heat Integration – Steam

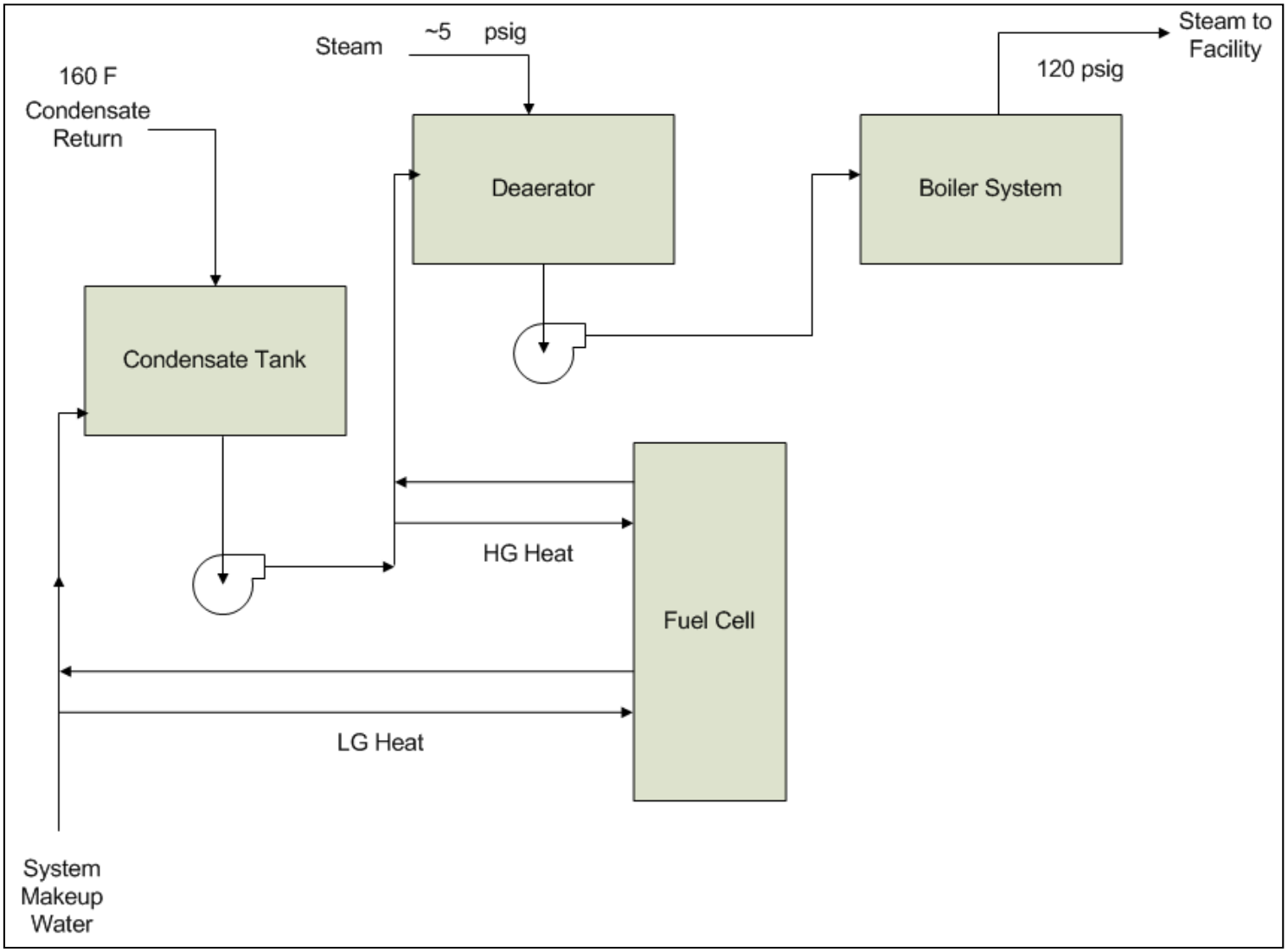

Heat Integration – Hot Water

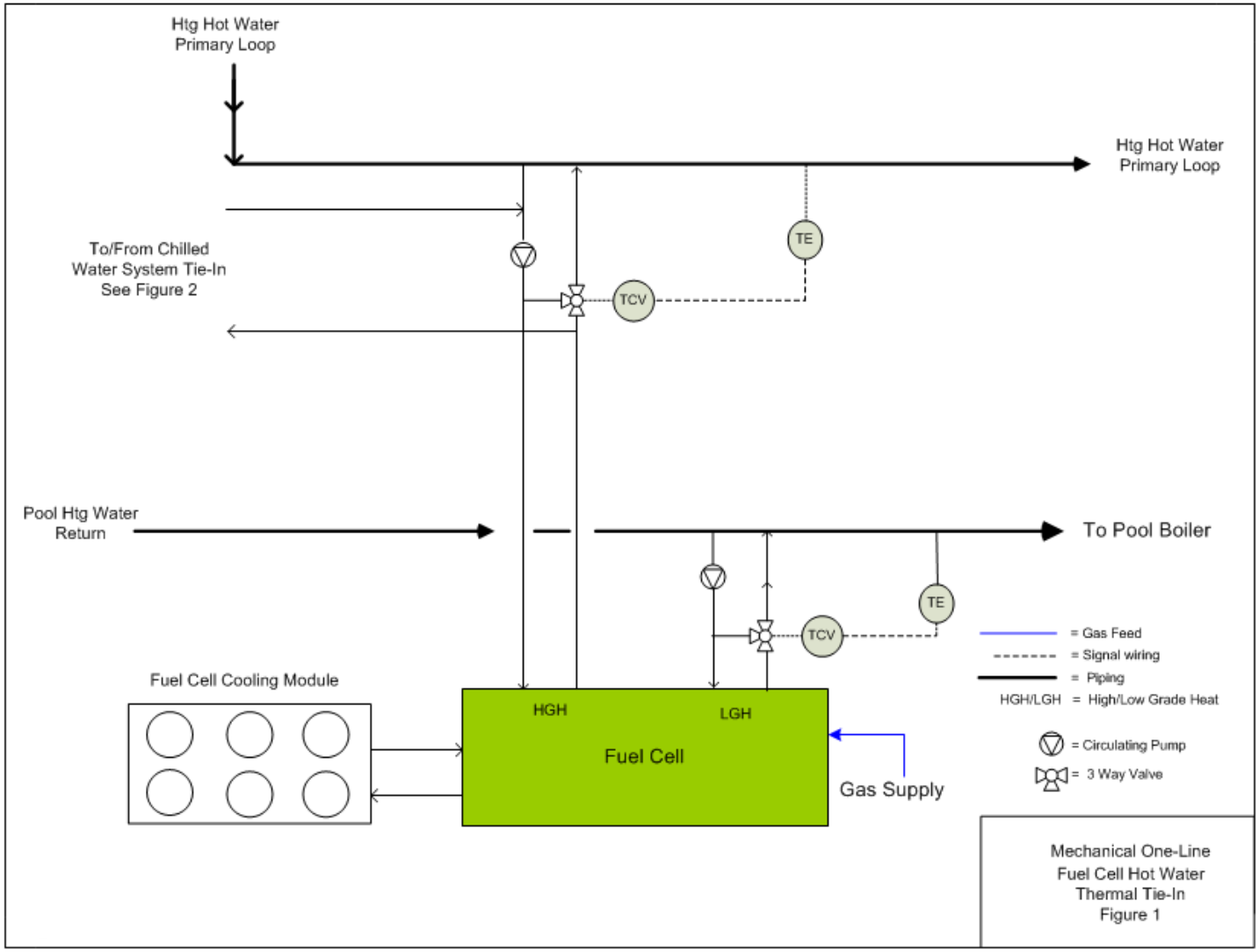

GovEnergy
www.govenergy.gov

Economic Benefits to Food Stores

Connecticut Location Example

- 128,000 ft², 24/7 operation
- Utility electricity rate: $0.12 kWh
- Utility natural gas (NG) rate: $15/MMBtu
- CHP input fuel NG rate: $6/MMBtu
- 400 kW fuel cell
- 40 ton absorption chiller (fuel cell heat driven)
- CHP System Generation Capability:
    - 3.3 million kWh annual electricity
    - 785,000 Btu/hr thermal
    - 95% Capacity & full heat utilization

Project Economic Benefits (15 year cycle)*

Net Present Value	$ 775,000
Internal Rate of Return (IRR)	18%
Payback on CHP Capital Investment	3 Years

GovEnergy
www.govenergy.gov

** Financial analysis provided by the Connecticut Center for Advanced Technology and includes CHP system operating expenses and the sale of Renewable Energy Credits (REC's).*

Environmental Benefits to Food Stores

- California location example
- Additional efficiency from process heat for combined cooling, heat and power
- Ability to run in backup power mode provides greater economic benefits; stores have stayed open while other supermarkets forced to close
- Incentive enabled payback within corporate approval guidelines

SAN JOSE, CA

eGrid Sub-region:	CAMX
State:	California

Annual Emissions Balance Sheet	*Energy Balance* Electricity (kWh)	Fuel (MMBTU)	*Emissions Balance* CO_2	NOx (metric tons - MT)	SO_2
Utility Avoided Emissions	(3,110,682)	(3,699)	(1,968)	(1.61)	(1.31)
On-Site Power Emissions	0	25,616	1,356	0.04	0.00
BALANCE	*(3,110,682)*	*21,917*	*(612)*	*(1.56)*	*(1.31)*

Environmental Benefits	*Emissions Reduction* Metric Tons	Equivalence	%
CO_2	612	141 acres of trees	31%
NO_X	1.56	90 cars	97%
SO_2	1.31		100%
Water	433,244 gal	0.7 olympic pools	100%

Avoided Emissions & Water vs Fossil Fuel Generation

This method is consistent with the guidance of the EPA CHP Partnership and their CHP Emissions Calculator.

Utility emissions factors based on U.S. EPA eGRID2007 (year 2005 data) for average fossil-fueled generation in sub-region.
Utility water consumption based on U.S.G.S. data, 1995.

GovEnergy
www.govenergy.gov

Project Screening Criteria for Fuel Cell CHP Applications

1. Is the building located in California or the Northeast?

YES

2. Is it served by pipeline natural gas?

YES

3. Is there an average year-round power and heat demand?

YES

4. Is there a sufficient "spark spread" in your area?

YES

5. Is there sufficient space?

YES

Your facility may benefit from a fuel cell installation

GovEnergy
www.govenergy.gov