GovEnergy
www.govenergy.gov
The Premier Energy Training Workshop
and Trade Show for Federal Agencies

A River of Energy Solutions

Energy Savings and Sustainable Opportunities: Heat Reclaim and Steam Pressure Reduction

Frank Silva

First Savings Opportunity

- Heat Reclaim

Building Zone Requirements

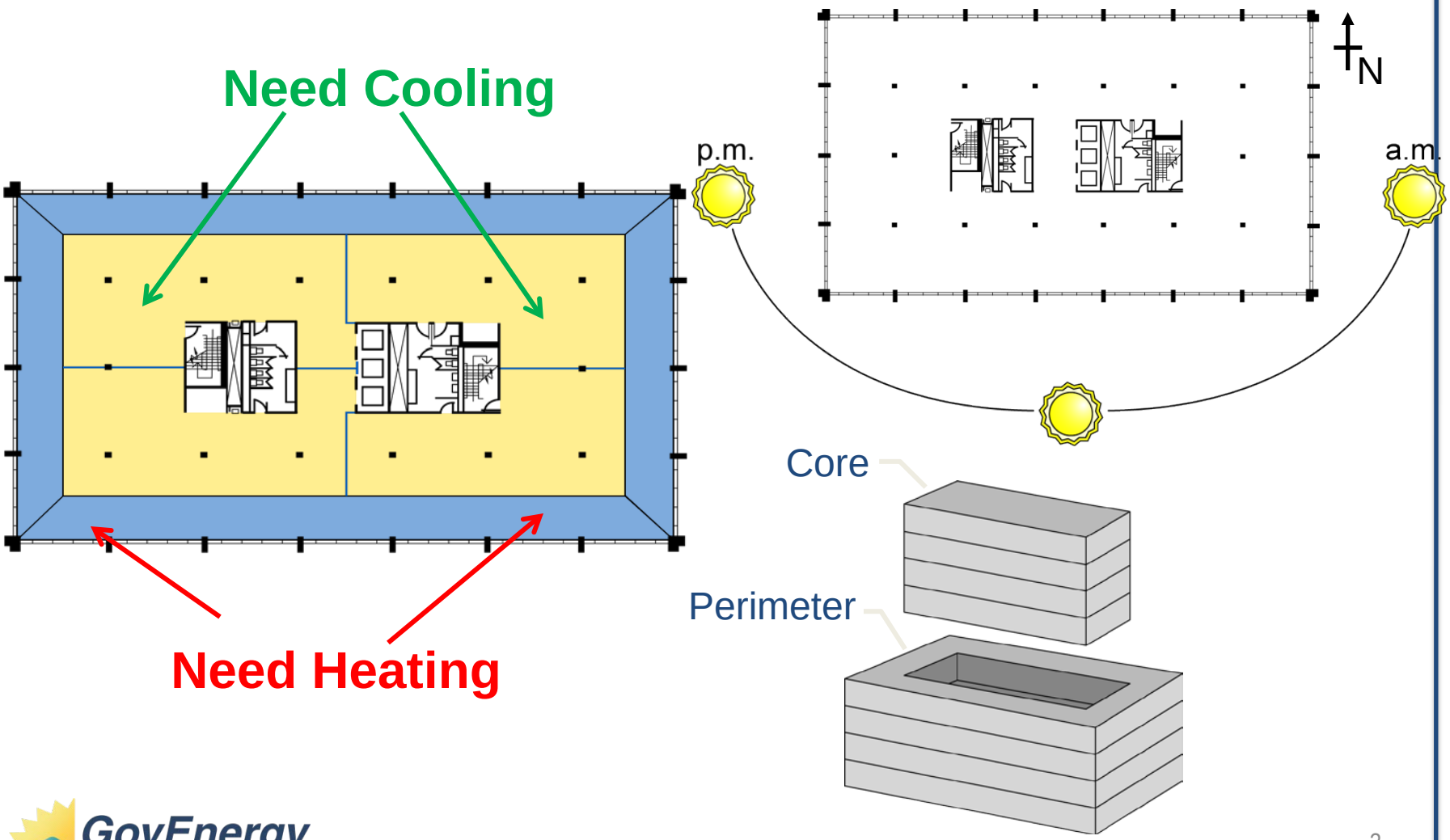

GovEnergy
www.govenergy.gov

Heat Recovery Seasonality

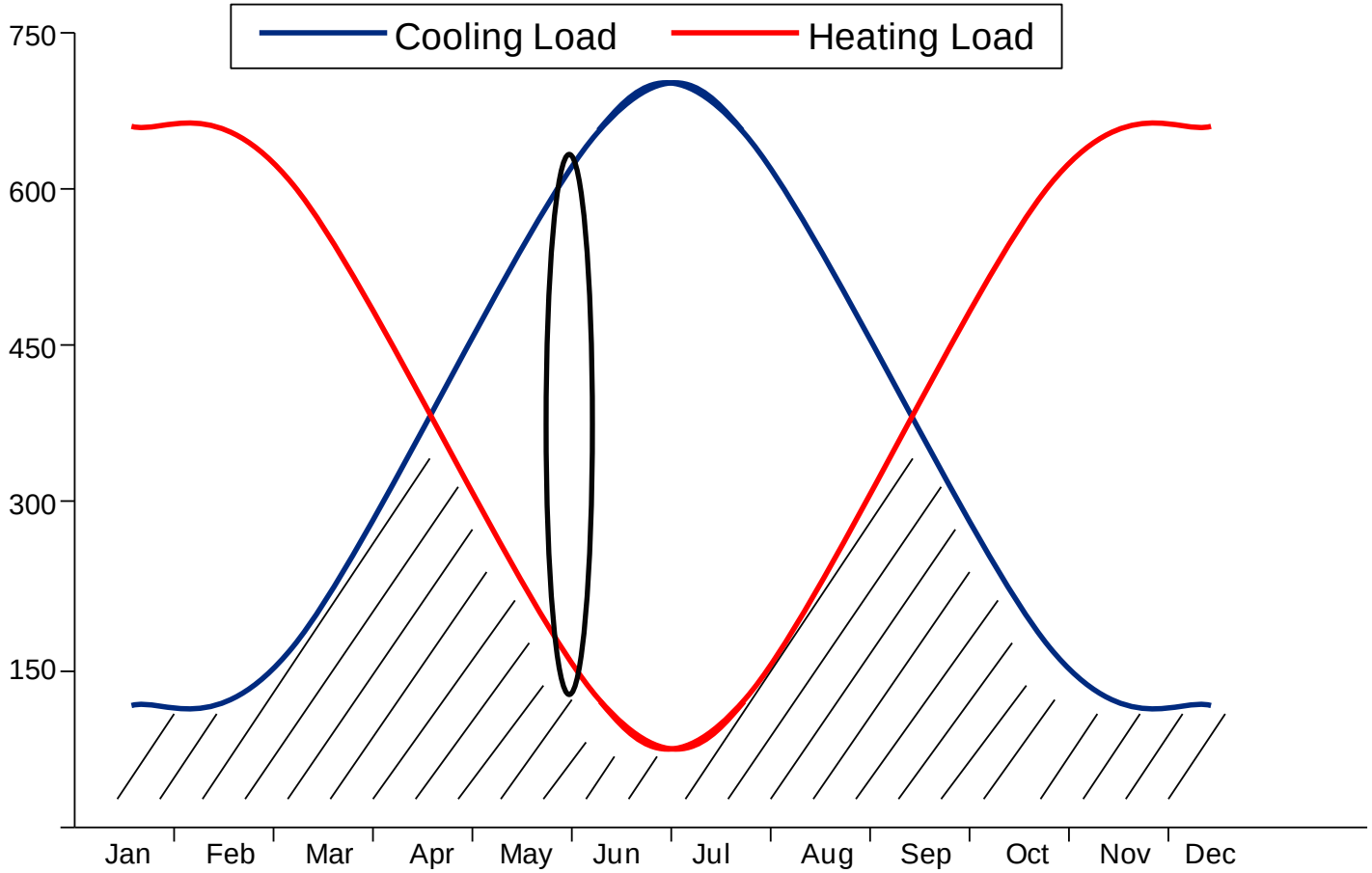

Example:
Cooling Load: 600 tons
Heating Load: 125 tons

GovEnergy
www.govenergy.gov

Traditional Boiler/Chiller Configuration

Simultaneous heating and cooling:

+

=

Traditional configuration: Boiler + Chiller

Gas Boilers add heat	Chillers remove heat	Total
(4.5 ikW / Ton)	(0.356 ikW / Ton)	(5.1 ikW / Ton)
125 tons x 4.5 ikW	600 tons x 0.356 ikW	
$184,990	$149,691	$334,681

Based on: 8,760 hours of Operation / year
Electricity: $0.08 / kWh
Natural Gas: $11.00 / Decatherm

GovEnergy
www.govenergy.gov

Heat Recovery Configurations

Parallel Arrangement

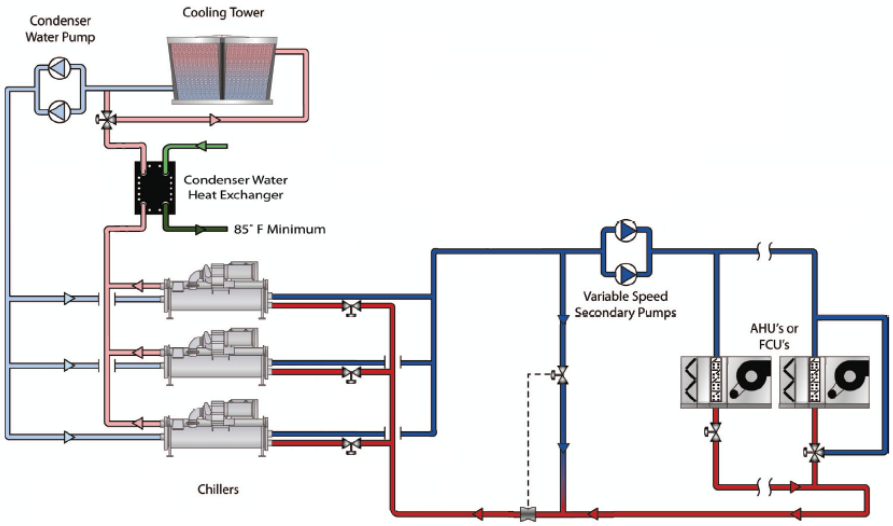

Dedicated Heat Reclaim

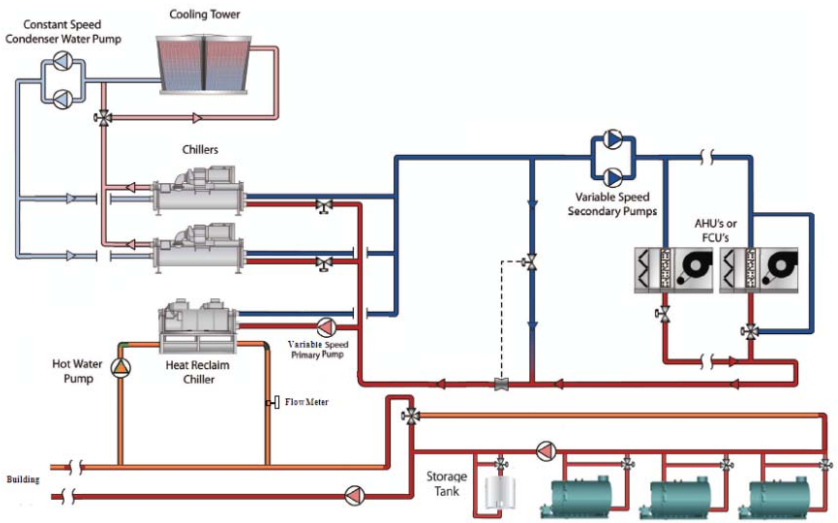

Leaving Condensing Temperature	kW/Ton
65 F	0.356
85 F	0.6
135 F	1.5

GovEnergy
www.govenergy.gov

Parallel Arrangement

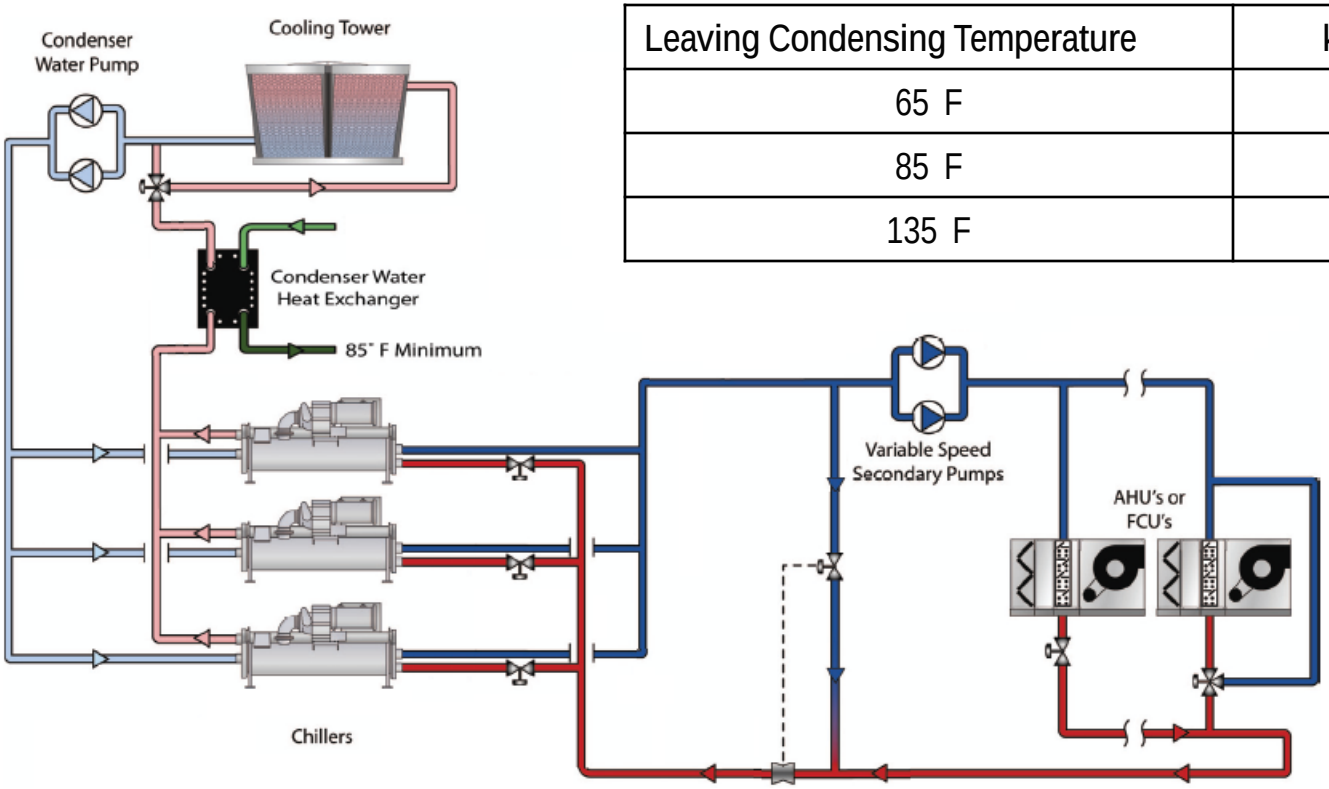

Leaving Condensing Temperature	kW/Ton
65 F	0.356
85 F	0.6
135 F	1.5

- All chillers operating as heating units
- Cooling cycle affect by high condensing temperatures = inefficient chillers

GovEnergy
www.govenergy.gov

Dedicated Heat Reclaim

Leaving Condensing Temperature	kW/Ton
65 F	0.356
85 F	0.6
135 F	1.5

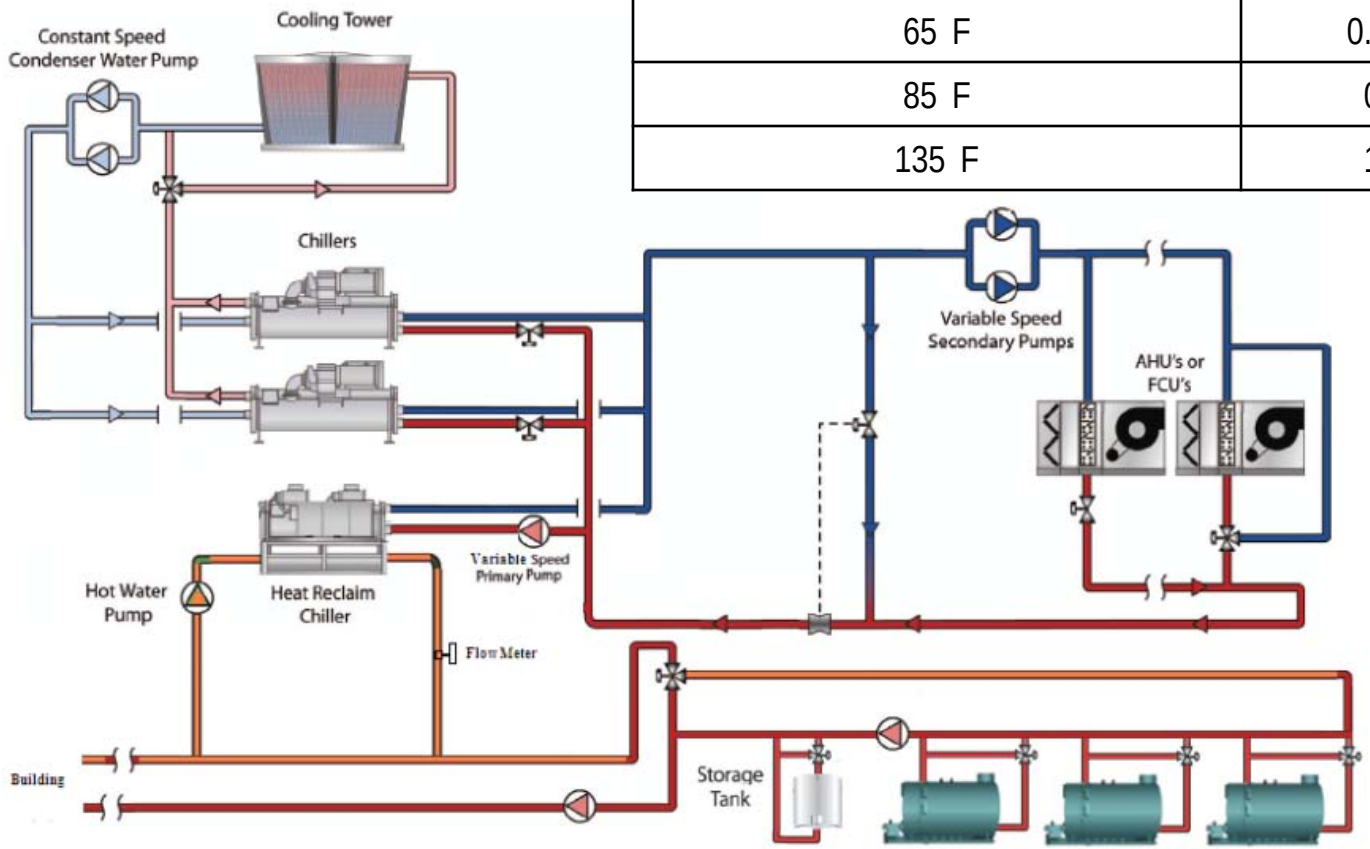

- Only heating machine operating with high condensing temperatures
- Remaining cooling operated by chillers at low condensing temperatures

GovEnergy
www.govenergy.gov

Heat Recovery Seasonality

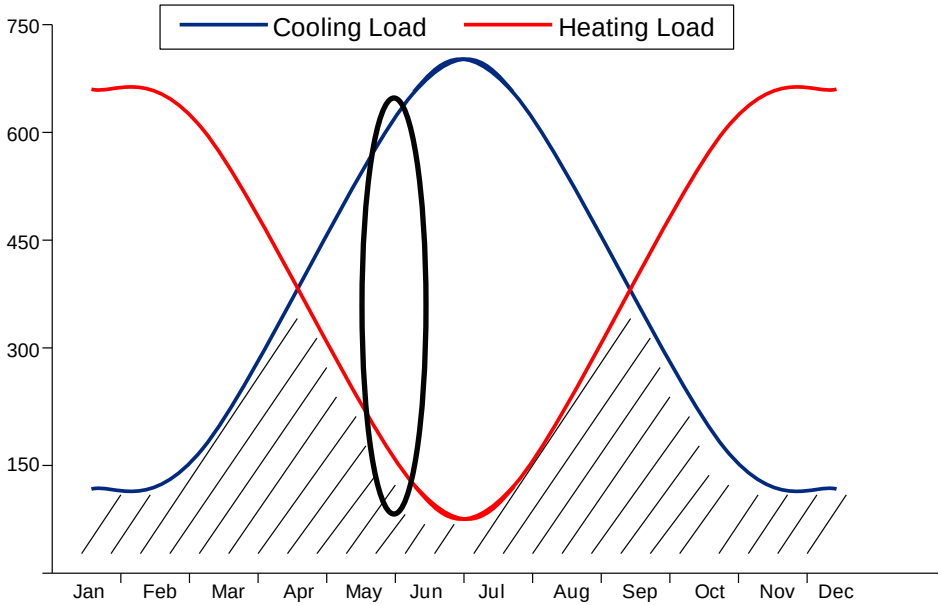

Example:
Cooling Load: 600 tons
Heating Load: 125 tons

Parallel Arrangement

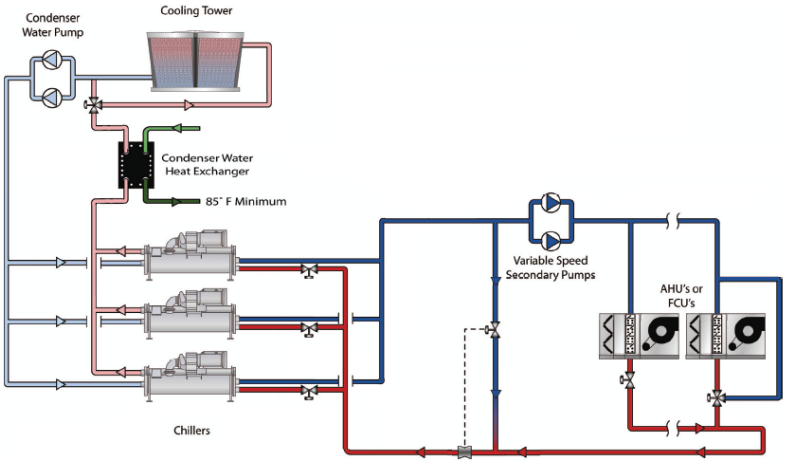

Dedicated Heat Reclaim

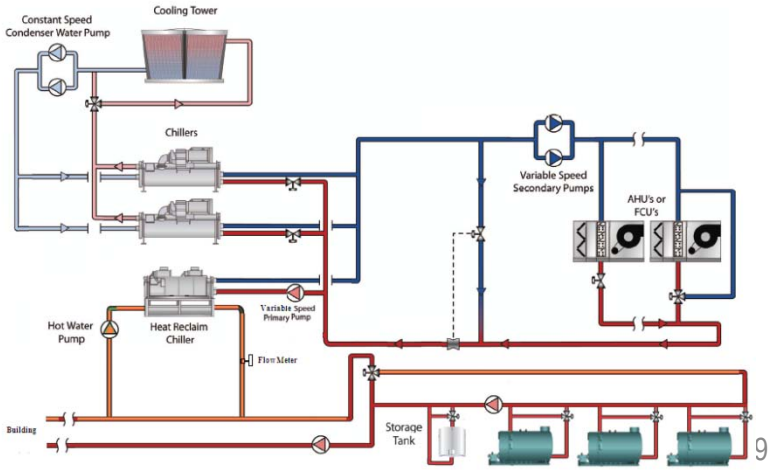

GovEnergy
www.govenergy.gov

Heat Recovery Seasonality

Traditional Heating/Cooling: 776kW
Boiler Load = 125 tons x 4.5kW
Chiller Load = 600 tons x 0.356 kW
$305,645/year

Parallel Arrangement

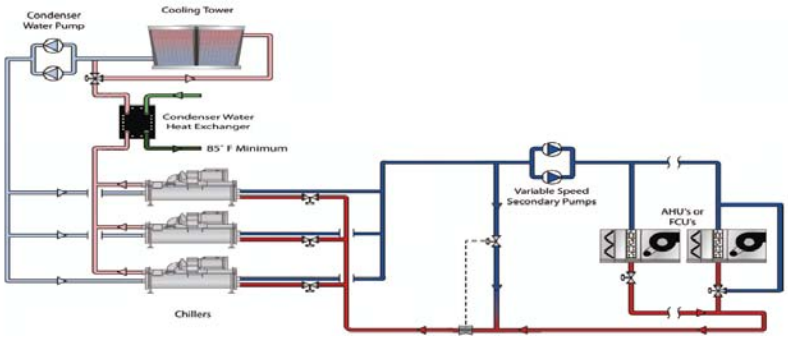

Boiler Load = 0 kW
Chiller Load = 0 kW
Heat Reclaim Chillers = 600 tons x 1.5kW
Total Consumption: 900kW
$630,720/year

Dedicated Heat Reclaim

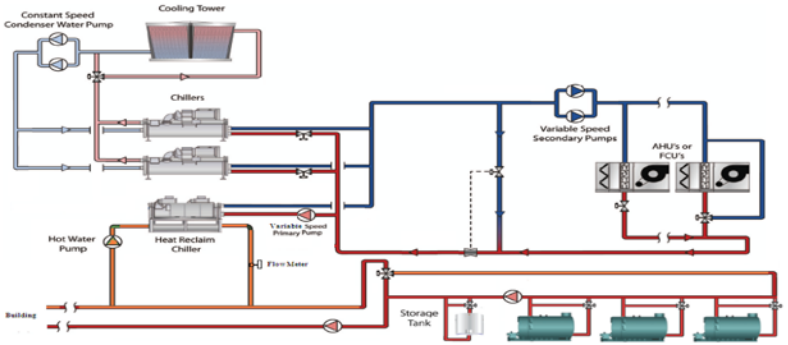

Boiler Load = 0 kW
Chiller Load = 500 tons x 0.356 kW
Heat Reclaim Chillers = 100 tons x 1.5kW
Total Consumption: 328kW
$229,862/year

GovEnergy
www.govenergy.gov

Savings from Heat Reclaim

Simultaneous heating and cooling:

+

=

Traditional configuration: Boiler + Chiller

Gas Boilers add heat	Chillers remove heat	Total
(4.5 ikW / Ton)	(0.356 ikW / Ton)	(4.85 ikW / Ton)

Heat Reclaim Approach

Heat Machines transfer/add heat	Generate cooling	Total
(1.5 ikW / Ton)	(0 ikW / Ton) Byproduct	(1.5 ikW / Ton)

Savings vs. Traditional Configuration: 3.35 ikW/ Ton
$75,783 operational savings per year

GovEnergy
www.govenergy.gov

Heat Recovery Seasonality

Example: Charlotte Facility

- 200 Ton Heat Reclaim unit
  - 38F chilled water
  - 126F hot water
- 44% reduction on Natural Gas Bill

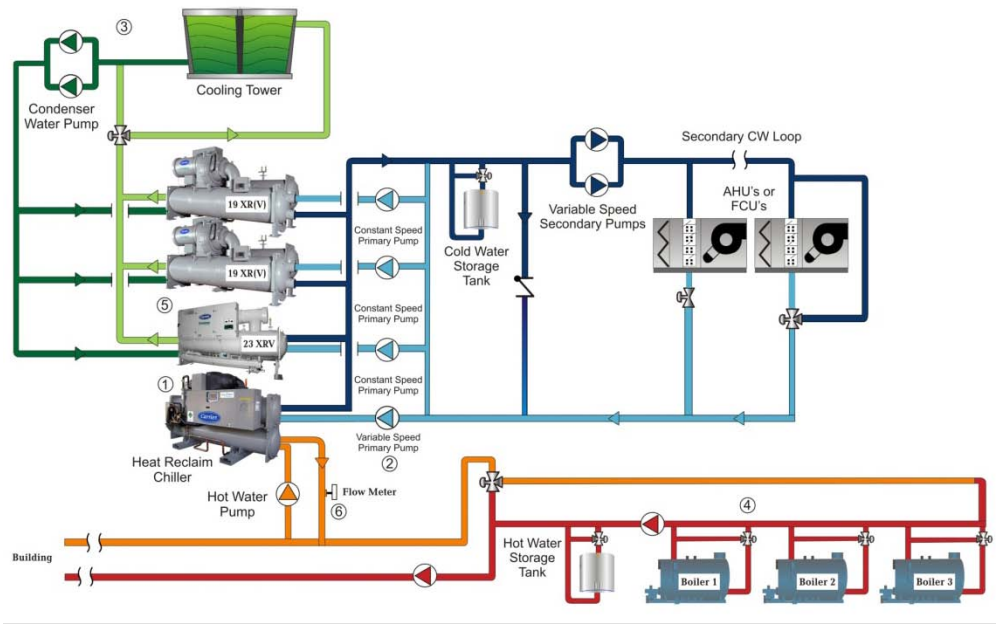

Financial Benefits:

- $103,038 Annual Savings

Environmental Benefits:

- 368 tons of CO2e Annual Reduction
- Over 1,000,000 gallons of fresh water annual savings

- ROI < 2 years

GovEnergy
www.govenergy.gov

Second Savings Opportunity

- Steam Pressure Reduction Stations

What is it?

Pressure Reduction Power Systems:

- Self contained power system
- Utilizes steam to generate electricity where a turbine is the key element
- Ideal solution for application which utilizes a Pressure Reducing Valve (PRV) for steam applications

Self Contained Power System

Actual Systems (most of the existing systems)

Pressure Relief Valves only;

Most applications receive steam at a higher pressure than the application needs.

Pressure reduction through PRVs wastes valuable energy.

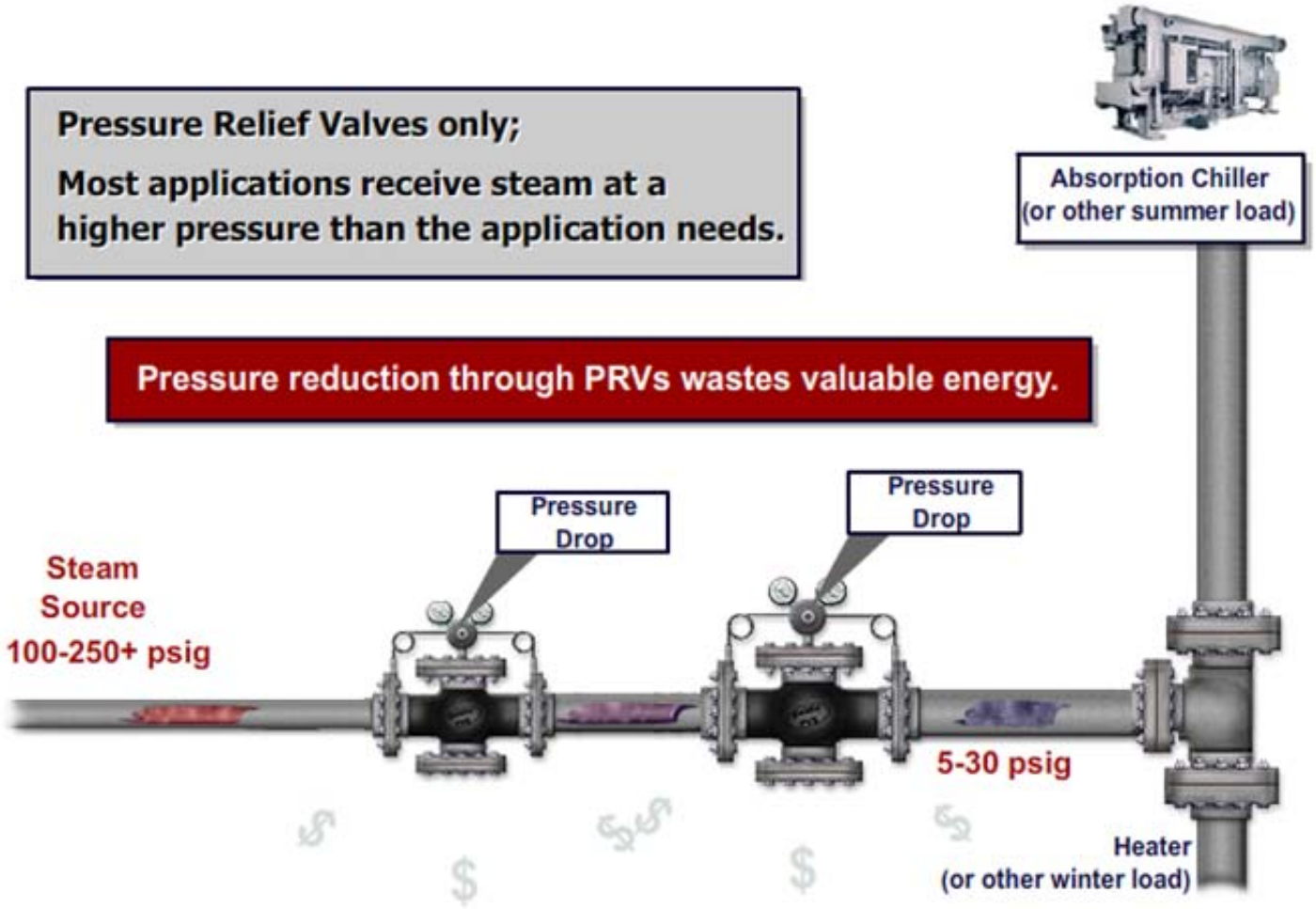

Power System In Parallel… Delivers Energy

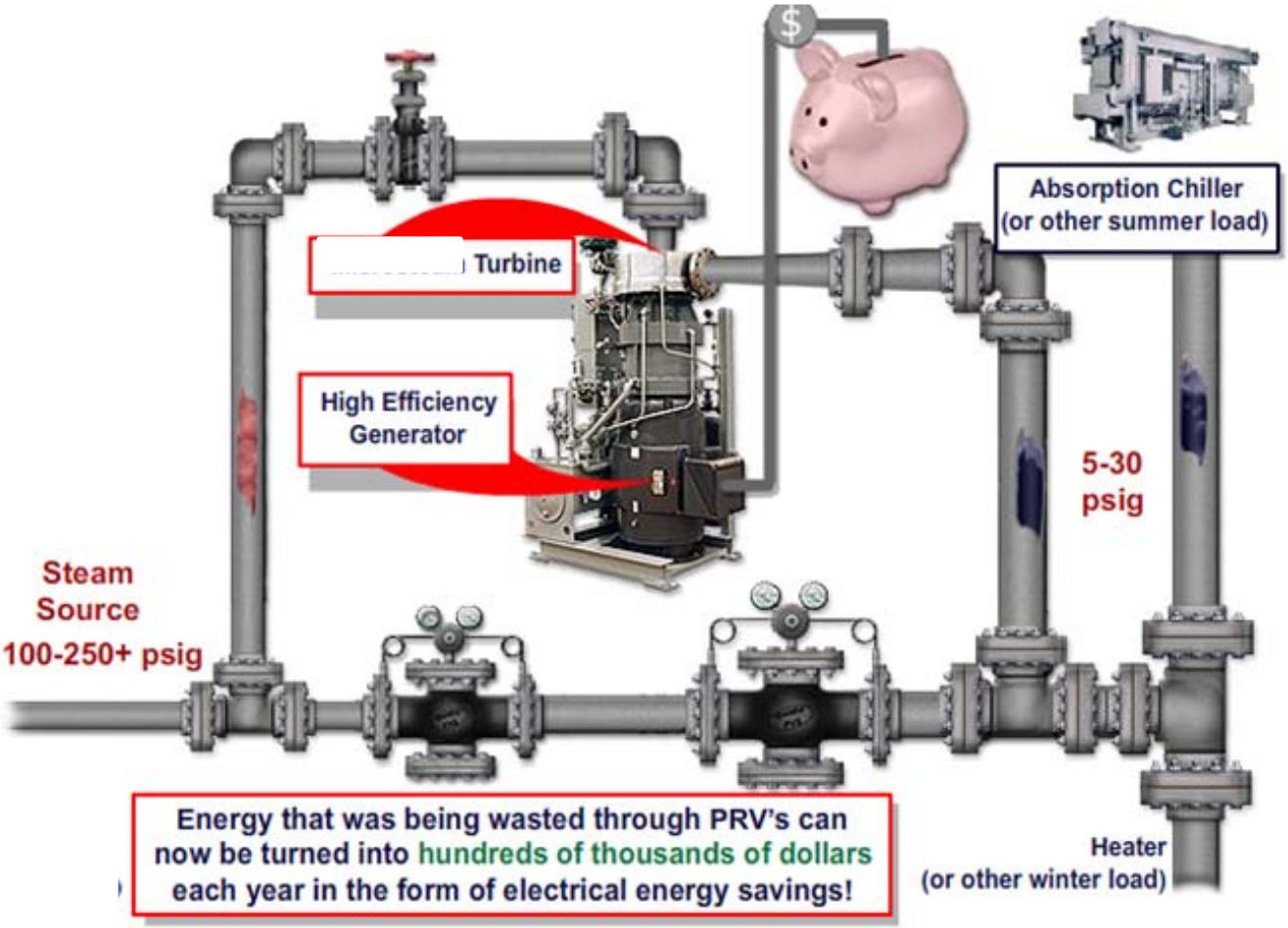

GovEnergy
www.govenergy.gov

Power System In Parallel… Delivers Energy

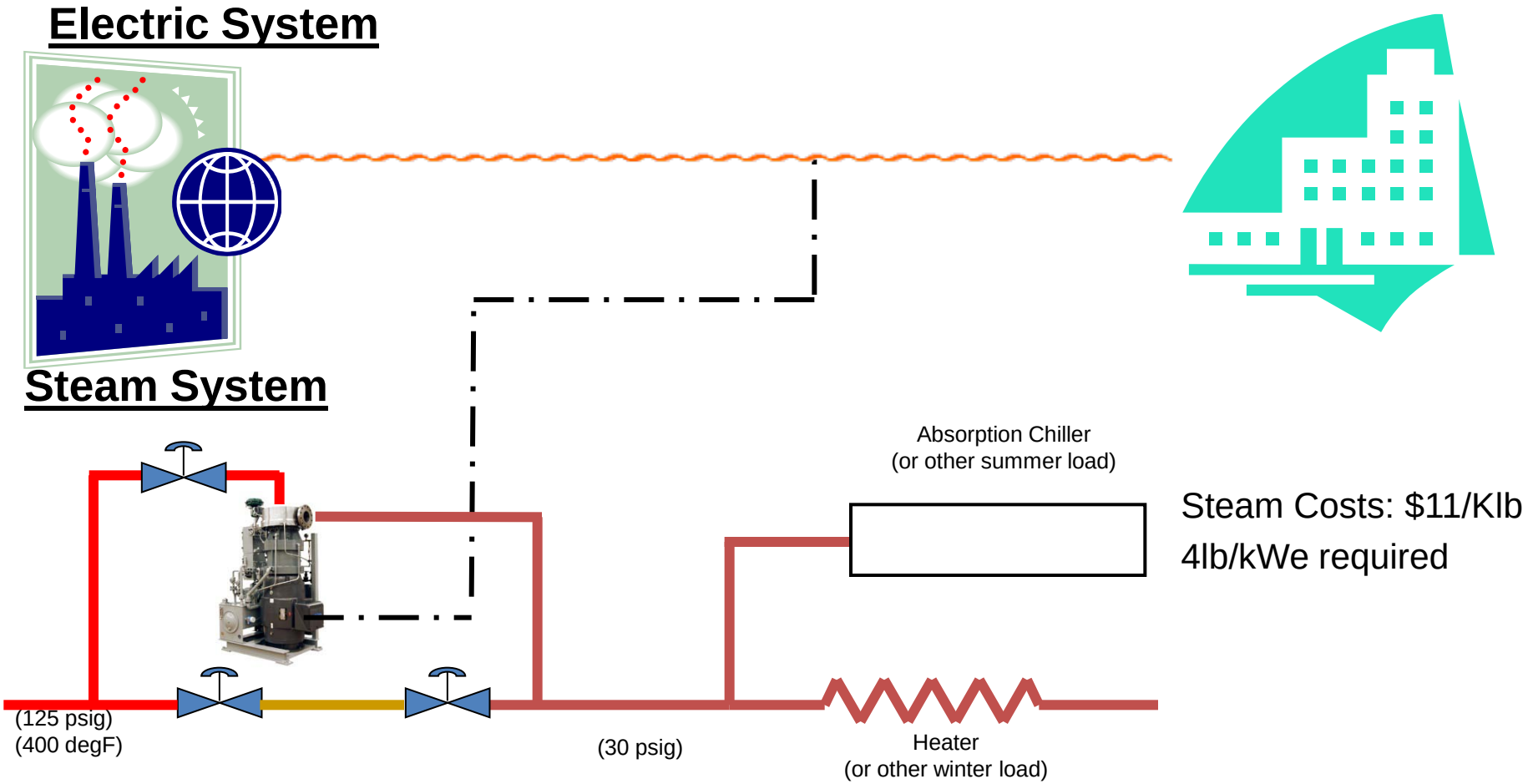

Electricity being generated

In the past…

Previous barriers for the use of “small” Steam Turbine Generators:

- Marginal Payback
- Large Physical Size
- Complex Operation
- Steam Quality
- Maintenance
- Noise
- Vibration

…not anymore

Performance

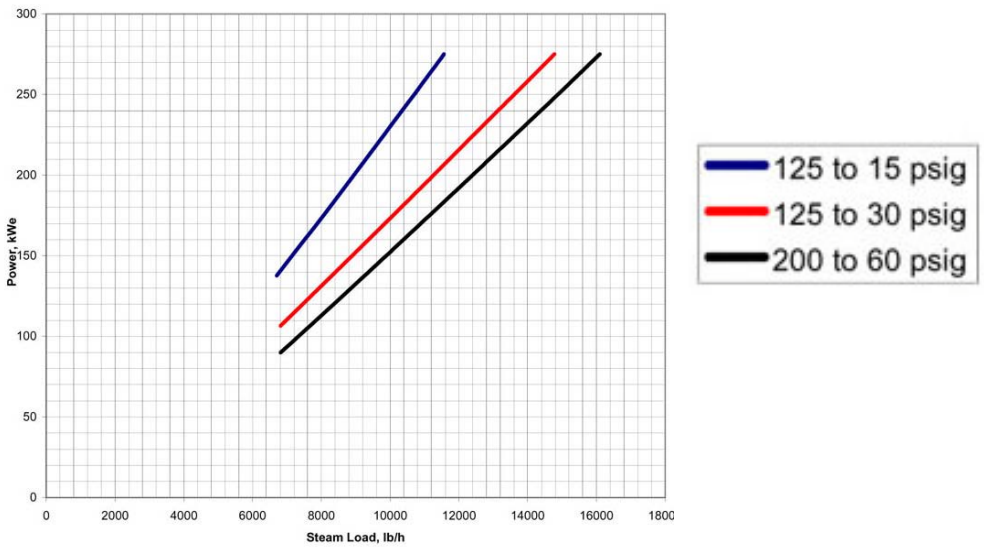

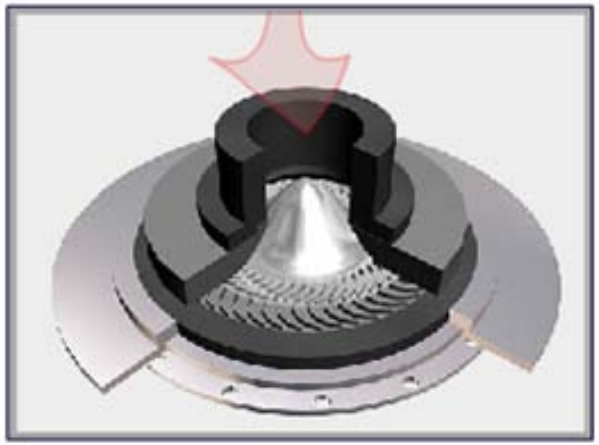

High Efficiency Radial Outflow Turbine:

- 80% at Pressure Ratio 2.5:1
- 70% at Pressure Ratio 5:1

Typical output between 150 – 275 kW

GovEnergy
www.govenergy.gov

Performance

- Energy Source:
  - Steam Flow Range: 4,000 – 20,000 lbs/hr
  - Pressures:
    - Inlet: 100 – 300 psig
    - Temperature: up to 500F
    - Outlet: 2 – 30 psig
- Output
  - Up to 275 kW
  - 480 volt / 3 phase / 60 Hz
  - 380 volt / 3 phase / 50 Hz
  - System Efficiency = 70%

Technical Innovation

- Solid titanium alloy rotor:
  - Very rugged compared to the usual steam turbines
  - Forgiving design for impure steam
- Capability to handle saturated steam
  - Steam quality of 0.95 and above

Benefits

- Financial Savings:
  - Energy Savings: Obtain energy from an opportunity being wasted
  - Peak Shaving: Lower the electrical demand during peak hours reduces demand charges
- Environmentally conscious installations:
  - Carbon footprint reduction
  - LEED enabler: EA-C1 and innovation credits

Financial $avings

Estimated Operating Cost Work Sheet

Annual Operation	#hours	Generated Power (kwh)	Extra Steam Flow Required (lb/hr)	Steam Cost	Electricty Cost	Net Annual Savings
Regular Hours	6500	275	1045	$74,718	$286,000	$211,283
Peak hours	1500	275	1045	$17,243	$103,125	$85,883
Electric Demand (note1)						$16,500
Carbon Credits						$0
Maintenance						-$5,000
Total				$91,960	$389,125	$308,665

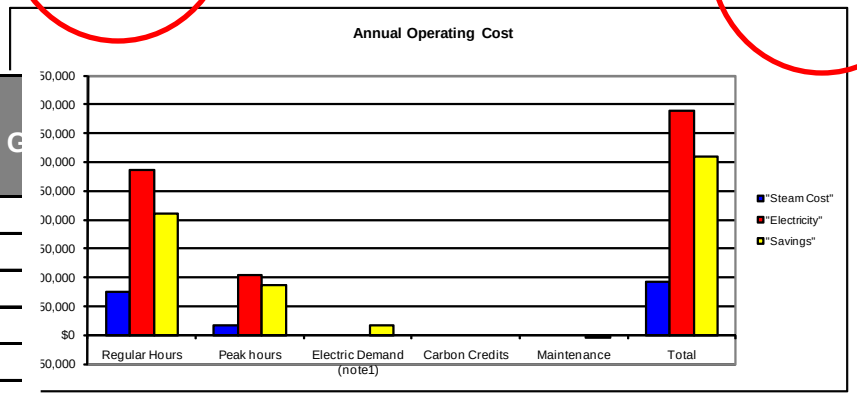

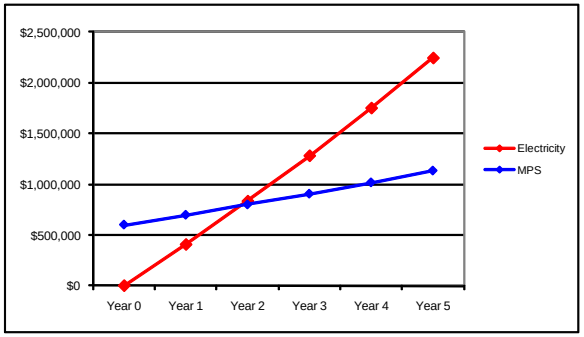

Pay Back (in years) = 1.9

Note 1: Assuming the electric demand can be lowered by the full amount of kW being generated

Annual Operation	#hours	G	Net Annual Savings
Regular Hours	6500		$211,283
Peak hours	1500		$85,883
Electric Demand (note1)			$16,500
Carbon Credits			$0
Maintenance			-$5,000
Total			$308,665

GovEnergy
www.govenergy.gov

Example: Typical Hospital in NYC

Environmental Impact

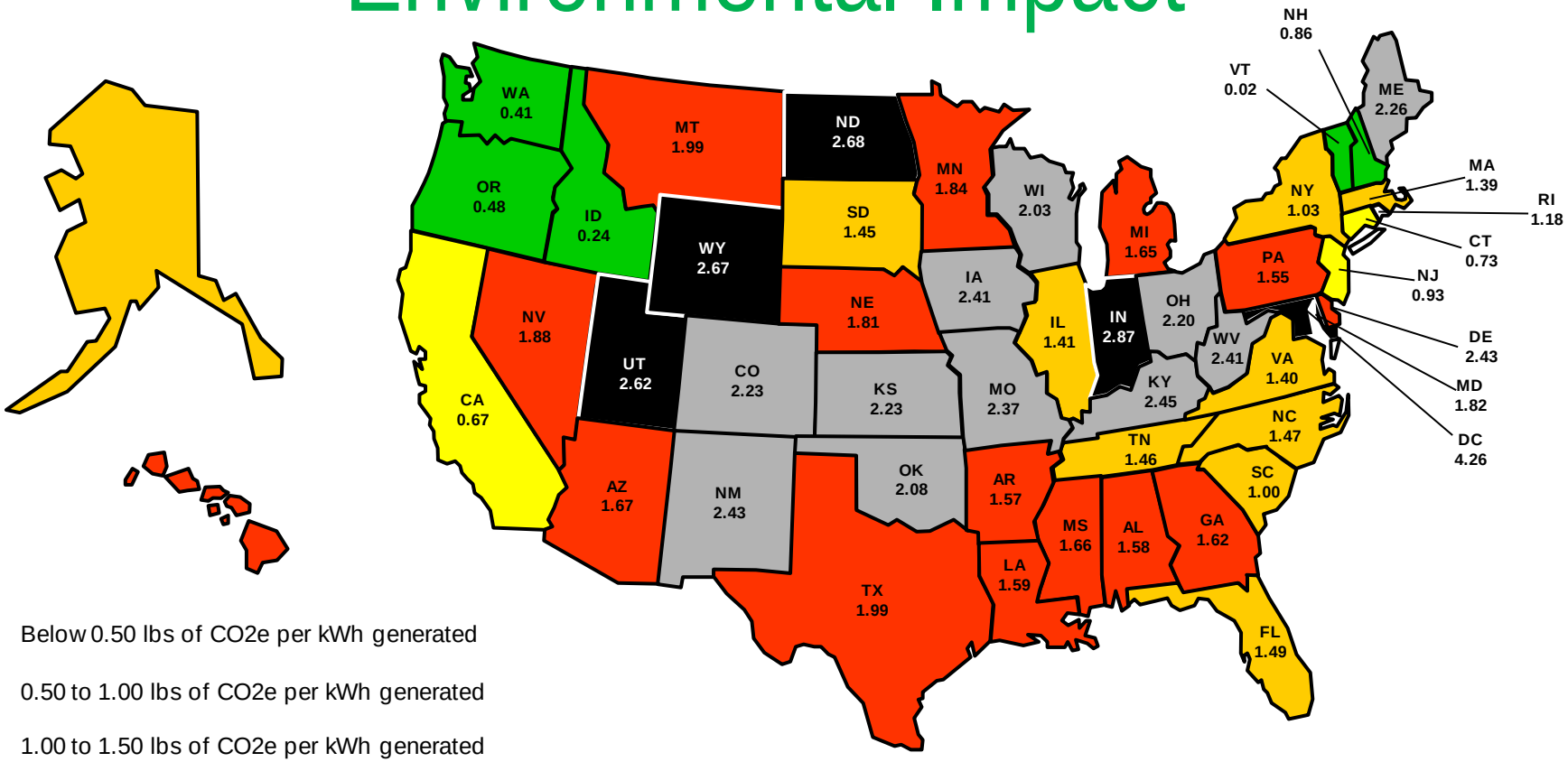

- Below 0.50 lbs of CO2e per kWh generated
- 0.50 to 1.00 lbs of CO2e per kWh generated
- 1.00 to 1.50 lbs of CO2e per kWh generated
- 1.50 to 2.00 lbs of CO2e per kWh generated
- 2.00 to 2.50 lbs of CO2e per kWh generated
- Above 2.50 lbs of CO2e per kWh generated

*based on the National Renewable Energy Laboratory report on "Source Energy and Emission Factors for Energy Use in Buildings" (dated June 2007).

GovEnergy
www.govenergy.gov

Environmental Savings

Green Benefits		
Average kWh Generated	275	kWh
CO2e Generation (per kWh from Utility Company)	1.98	lbs/kWh
Displaced Electricity CO2e	1980	tons/yr
Turbine CO2e Generation	0.510	lbs/kWh
Displaced Turbine CO2e	510	tons/yr
Turbine Hours of Operation	8000	hrs/yr
CO2e Reduction	1469.6	tons/yr

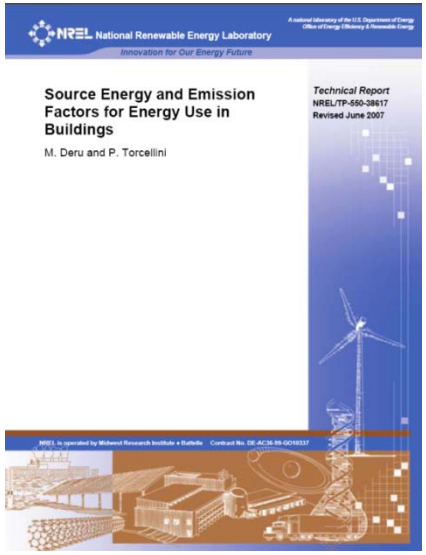

•In this example, it was used the CO_2 generation for the state of **Texas** based on the National Renewable Energy Laboratory report on "Source Energy and Emission Factors for Energy Use in Buildings" (dated June 2007).
•The applicable state/country information must be customized for each case.

7,398 tons of CO_{2e} savings in 5 years of operation

*This is a demonstration only. Real values will depend on a specific evaluation of the application/site in question

GovEnergy
www.govenergy.gov

How do I know it is right for me

- Do I have a steam pressure reduction station?
- Do I have a steam flow of 4,000 lbs/hr of steam or more?
- Do I pay more than $0.05/kWh for the electricity?
- Do I have annual energy reduction goals?
- Do I need to reduce my carbon footprint?
- Do I intend to obtain LEED certification?