GovEnergy
www.govenergy.gov
The Premier Energy Training Workshop
and Trade Show for Federal Agencies

A River of Energy Solutions

High Assurance Smart Grid

Tom Overman,

Chief Architect, Boeing Energy Cyber Security

thomas.overman@boeing.com, toverman@ieee.org

GovEnergy
www.govenergy.gov

Outline

- High Assurance for the Smart Grid ≠ EAL-7
- Distributed Control System Architecture
- Defense in Depth & Risk Management approach
- Example

thomas.overman@boeing.com; toverman@ieee.org

High Assurance for the Smart Grid

- "High Assurance" in this context refers to the IEEE definition
  - "integrated approaches for assuring reliability, availability, integrity, privacy, confidentiality, safety, and real-time performance of complex systems…"),
- See High Assurance Systems Engineering (HASE) 2011 conference web site
  - http://hase.eadvise.us/index.html

thomas.overman@boeing.com; toverman@ieee.org

Energy Flow & Energy Control Architecture

Energy Flow

Past

Hierarchical

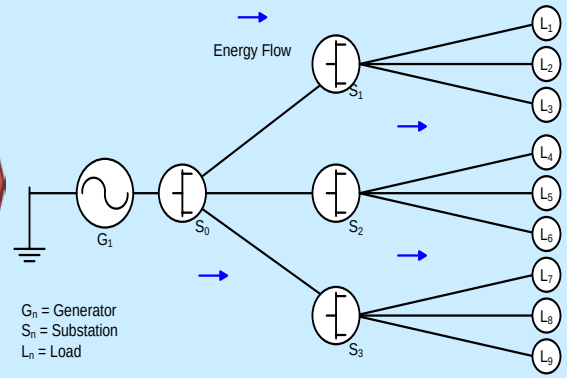

Present

Mesh with Distributed Generation

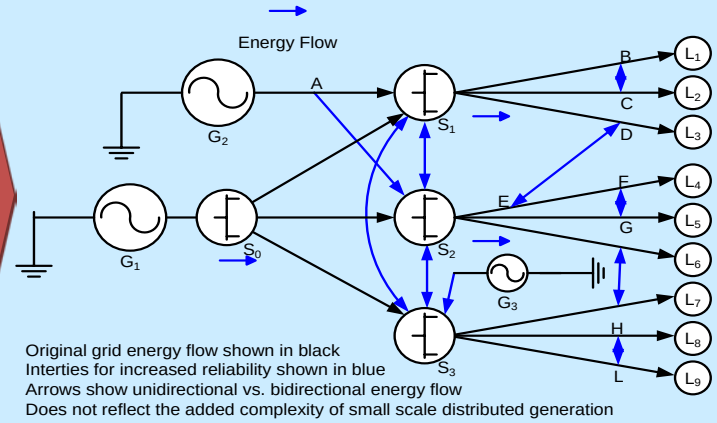

Energy **Distributed Network**

Grid Control Flow

Present

Hierarchical

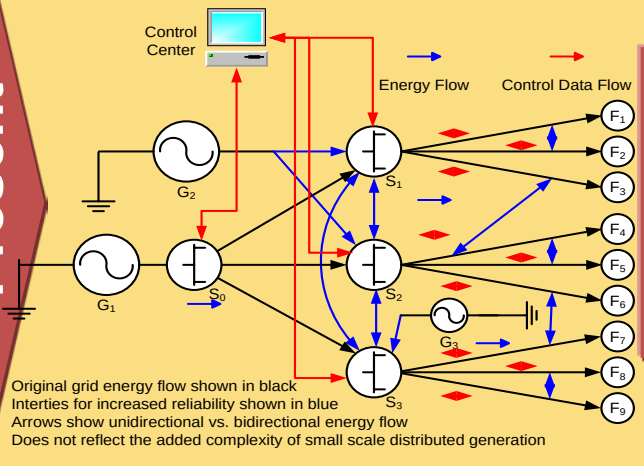

Future

Mesh with Distributed Intelligence

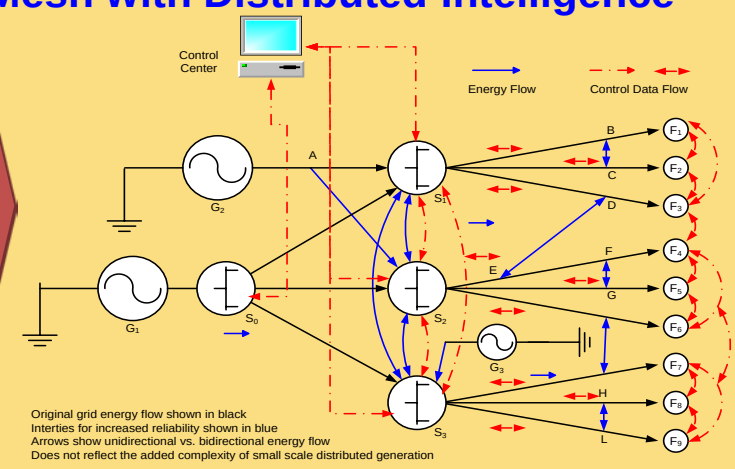

Control **Distributed Network**

GovEnergy
www.govenergy.gov

thomas.overman@boeing.com; toverman@ieee.org

BOEING

Cyber Security Defense in Depth & Risk Management

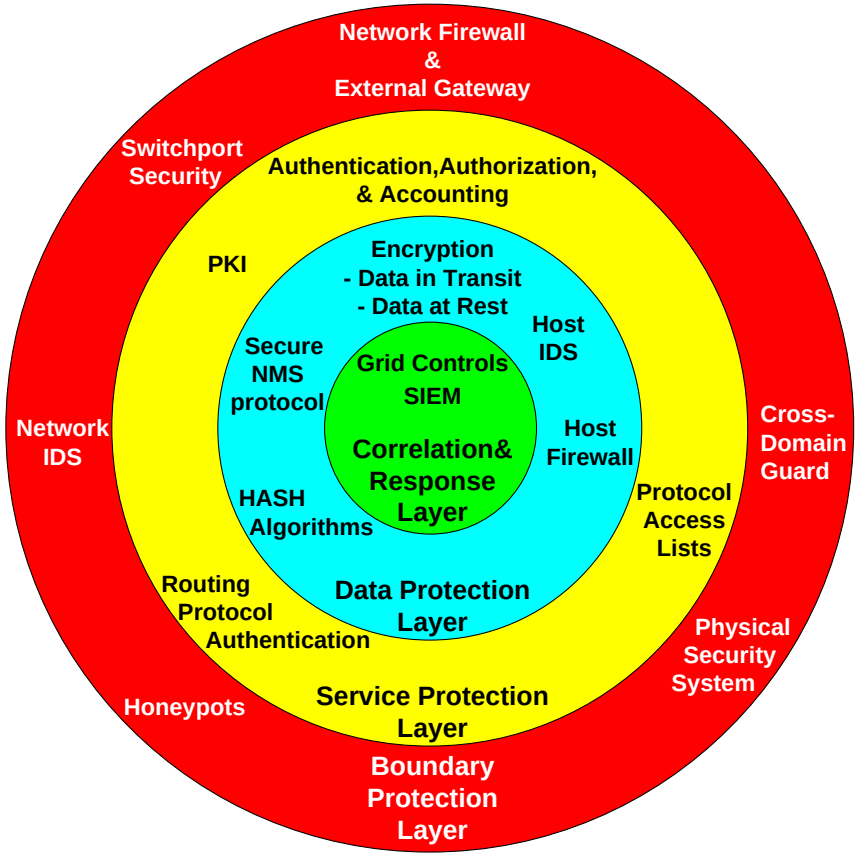

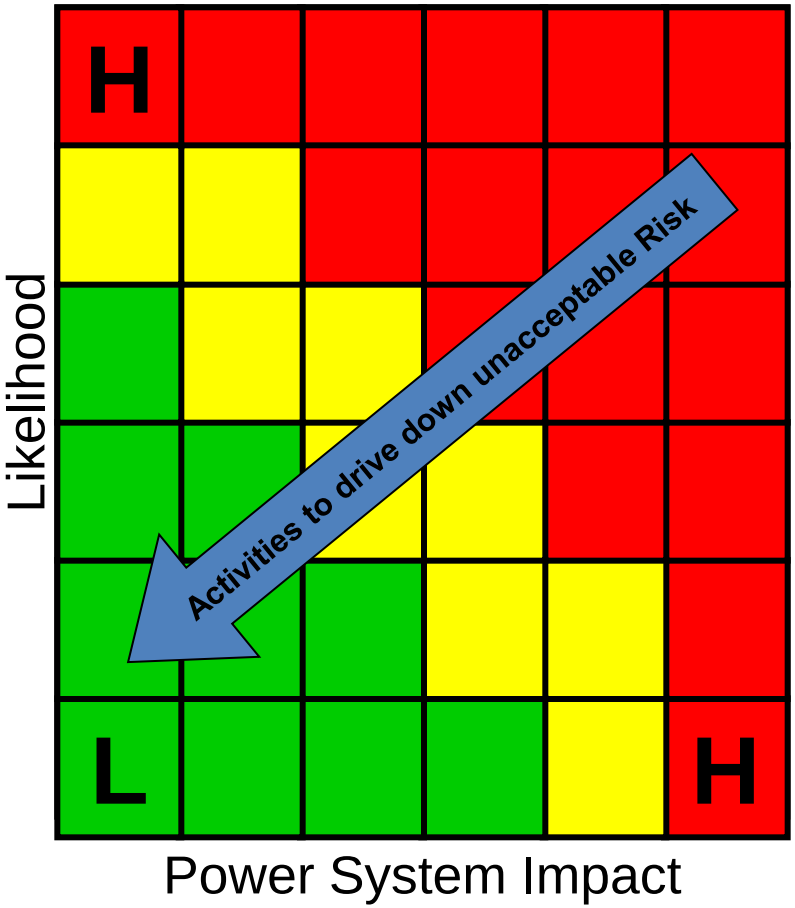

Defense in Depth & Risk Management Assessment determine which controls are needed at each node or type of node

GovEnergy
www.govenergy.gov

thomas.overman@boeing.com; toverman@ieee.org

BOEING

Defense in Depth Example

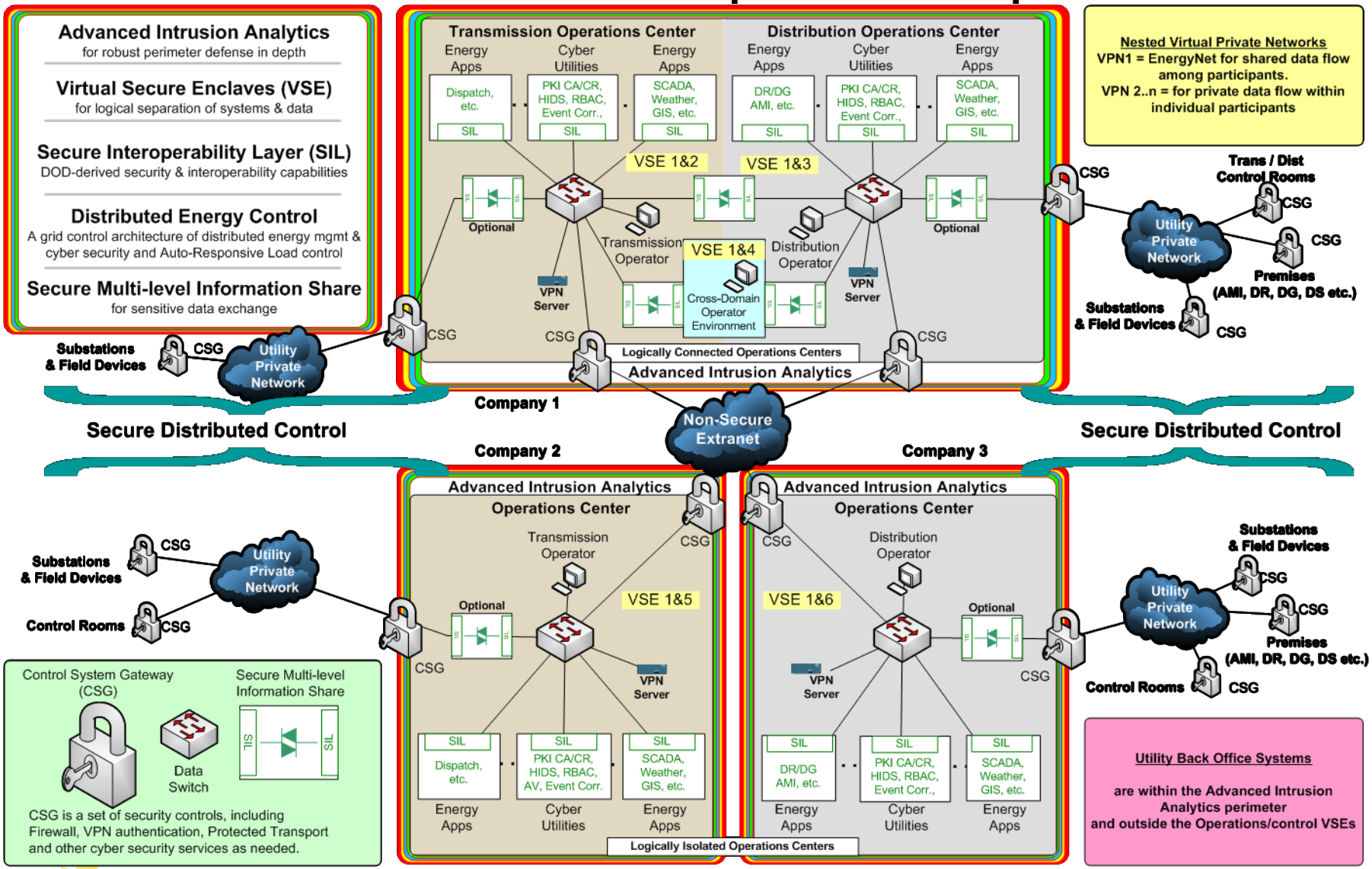

GovEnergy
www.govenergy.gov

thomas.overman@boeing.com; toverman@ieee.org

BOEING

Tom Overman,

Chief Architect, Boeing Energy Cyber Security

thomas.overman@boeing.com, toverman@ieee.org